Product data sheet

Variable speed drive E510-405-SH3FN4S-IP66/NEMA 4X, 4KW, 5HP, 380-460V

Features

- Advanced sensorless vector control
- Directly frequency setting and simple to adjust speed
- Integrated “STO” -Safety Torque Off and “Fire Mode” functions
- Built-in PID controller and PLC function
- Built-in” Multi-pump Cascaded” function with Master/Slave exchange.
- Built-in Modbus Communication (RS485)
- Built-in BACnet MS/TP

Component name		E510s
Horse Power(HP)		5
Suitable Motor Capacity Capacity(KW)		4.0
Rated Output Current(A)		9.2
Rated Capacity(KVA)		6.7
Input Voltage Range(V)		Three-phase 380~480V, 50/60Hz
Allowable Voltage Fluctuation		-15%~+10%
Output Voltage range(V)		Three-phase 0~480V
Input current(A)		11.6
Allowable Momentary Power Loss Time(Sec.)		2.0
Enclosure		IP 66/NEMA 4X
Control Mode		V/F, SLV, PMSLV
Frequency	Output Frequency	0.01~599.00Hz (V/F)
	Starting Torque	150%/3Hz(V/F), 150%/1Hz(Vector)
	Speed Control Ratio	1:50
	Frequency Resolution	Digital input: 0.01Hz
		Analog input:0.06Hz/60Hz
	Frequency Setting	Keypad: Set directly with ▲ ▼ keys or the VR on the Keypad
		External Input Terminals: AI1(0~10V/2-20mA), AI2(0~10V/2-20mA) Multifunction input UP/DOWN (Group3) RS485 Communication
		Setting frequency by communication method
	Frequency Limit	Lower and upper frequency limits, 3 skip frequency settings
Run	Operation Set	Keypad Run/Stop buttons
		External terminals: ▪ Multi- operation-mode (2 or 3 wire selection) ▪ Jog operation RS485 Communication
		Run signal by communication method
Main Control Features	V/F Curve Setting	15 fixed curves and one customized curve
	Carrier Frequency	1~16KHz

Product data sheet

Main Control Features	Acceleration and Deceleration	2 sections of Acceleration /Deceleration time setting (0.1~ 6000.0 Sec), 4 sections of S Curve setting
	Multifunction Digital Input	42 functions (refer to group3 in the manual)
	Multifunction Relay Output	27 functions (refer to group3 in the manual)
	Multifunction Analog Output	5 functions (refer to group4 in the manual)
	Main Features	Overload detection, 16 preset speeds, Auto-run, Acc/Dec curves setting, Main/Alternative run command select, Main/Alternative frequency command select, PID control, Torque boost, Auto restart, Speed search start, Fire mode, Constant-Pressure Pump control
Display	LED	Parameter, Parameter value, Frequency, Line speed, DC voltage, Output voltage, Output current, PID feedback, Input and output terminal status, Heat sink temperature, Firmware version, Fault list
	LED Status Indicador	Run / Stop, Forward / Reverse, Frequency screen, Parameter screen
Protective Functions	Overload Protection	Electrical overload protection curves selectable
	Over Voltage	200V class :>410V, 400V class:>820V
	Under Voltage	200V class :<190V, 400V class:<380V
	Momentary Power Loss Restart	Inverter can be set to restart automatically
	Stall Prevention	Stall prevention for Acceleration/ Deceleration/ Operation.
	Short-circuit Output Terminal	Electronic Circuit Protection
	Grounding Fault	Electronic Circuit Protection
	Other Protection Functions	Heat sink over temperature, Reverse prohibit, Parameter lock up, Safety Torque Off (STO, SIL2), motor PTC feedback, phase loss detection, communication error detection
	Brake transistor	Built in
Communication control	▪ Built-in RS485 / BACnet communication ▪ Optional add-on communication module: Profibus / DeviceNet / CANopen / Ethernet	
Environment	Operating temperature	IP20/NEMA 1 Type: –10 ~ 50℃ (without stick on type dust cover.) –10 ~ 40℃ (with stick on type dust cover.) IP66/NEMA 4X Type: -10~40℃
	Storage temperature	-20~ 60℃
	Humidity	95% RH or less (no condensation) (Compliance with IEC 60068 -2-78)
	Shock	1G. (9.8m/s²) for < 20Hz. 0.6G (5.88m/s²) 20Hz~50Hz (Follow IEC60068-2-6 standard)
	Enclosure	IP20/NEMA 1 and IP66/NEMA 4X

External View

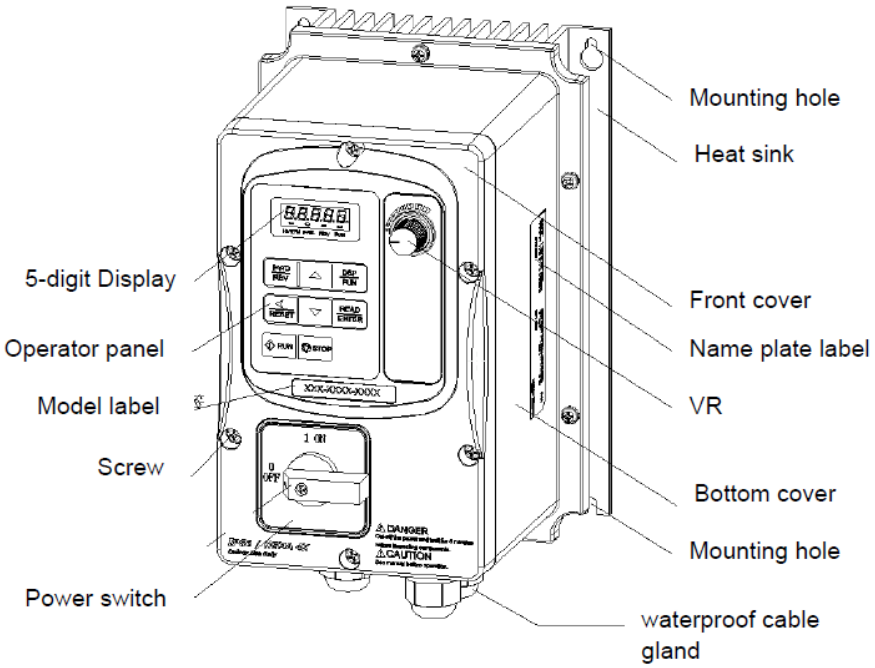

(IP66/NEMA 4X With/Without VR and power switches depending on the model)

Inverter De-rating Based on Temperature

Curves below show the applicable output current de-rate due to setting of carrier frequency and the ambient operating temperatures of 40 and 50 ℃.

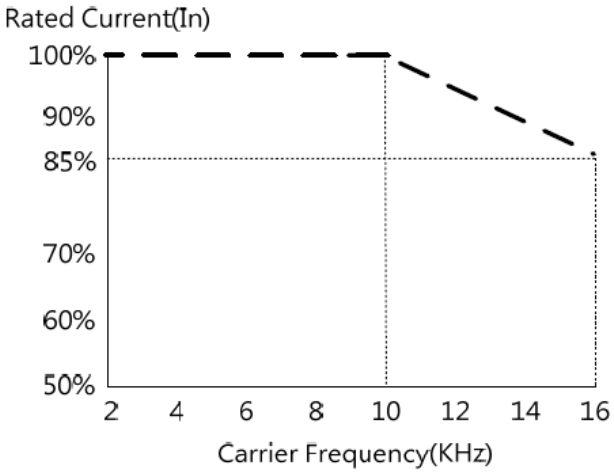

Notes:

••••••••• De-rate curve for ambient temperature of 40 ℃

– – – – De-rate curve for ambient temperature of 50 ℃

General Wiring Diagram (Three phase)

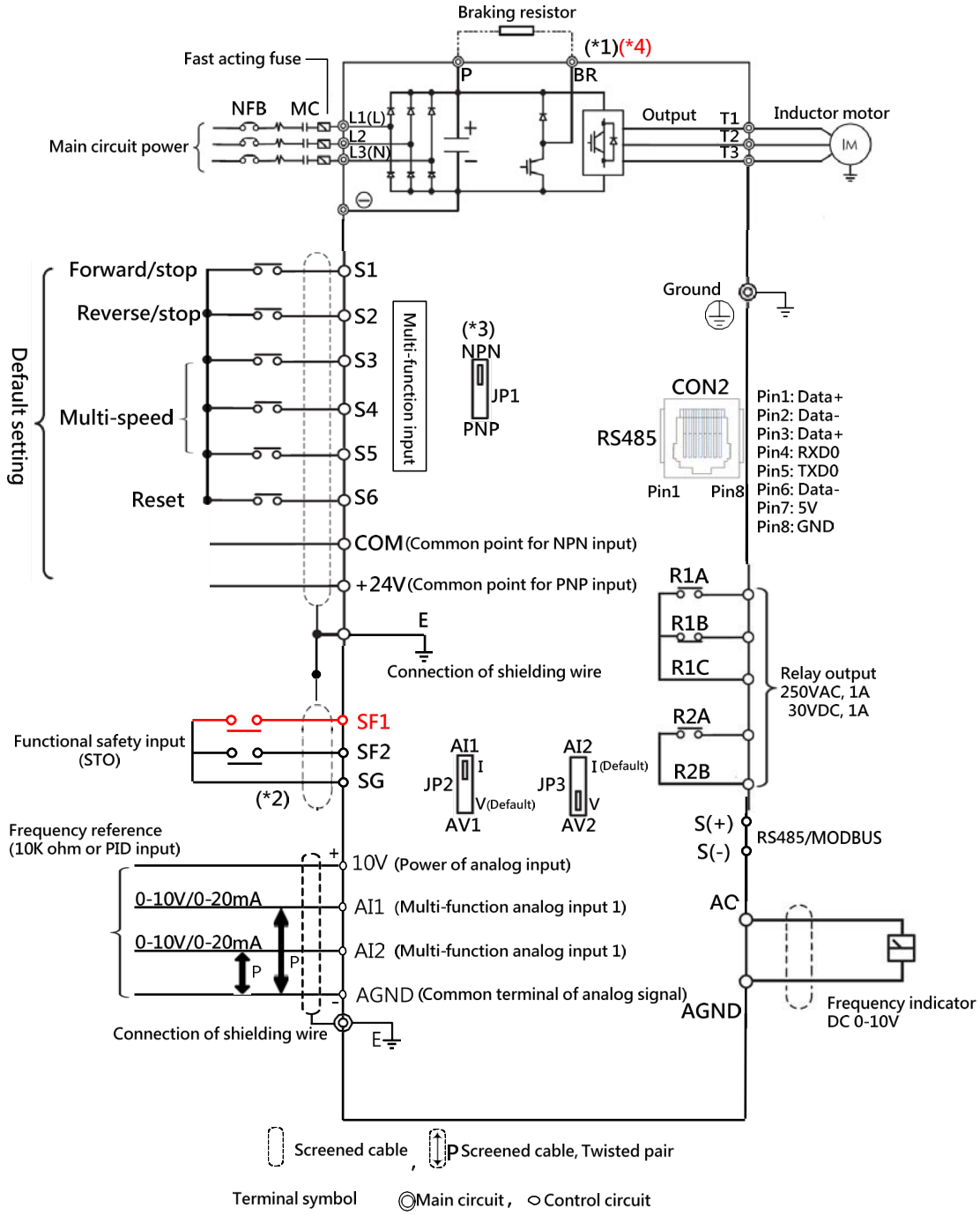

Remark：

(*1) The braking resistor can be connected directly to the built-in braking transistor between terminals P and BR.

(*2) Safety input connectors (SF1/SG and SF2/SG) should be shorted when the safety inputs are not used.
To activate STO, the safety circuit components must be connected to the SF1/SF2/SG terminals, and the factory-installed short link between SG/SF1 and SG/SF2 must be removed.

(*3) JP1 can set the multi-function digital input terminals S1-S6 to Sink (NPN) or Source (PNP).

(*4) Models 200V 25HP and 400V 30HP and higher ratings provides P1 terminal for DCL (DC Choke) connection.

Dimensions

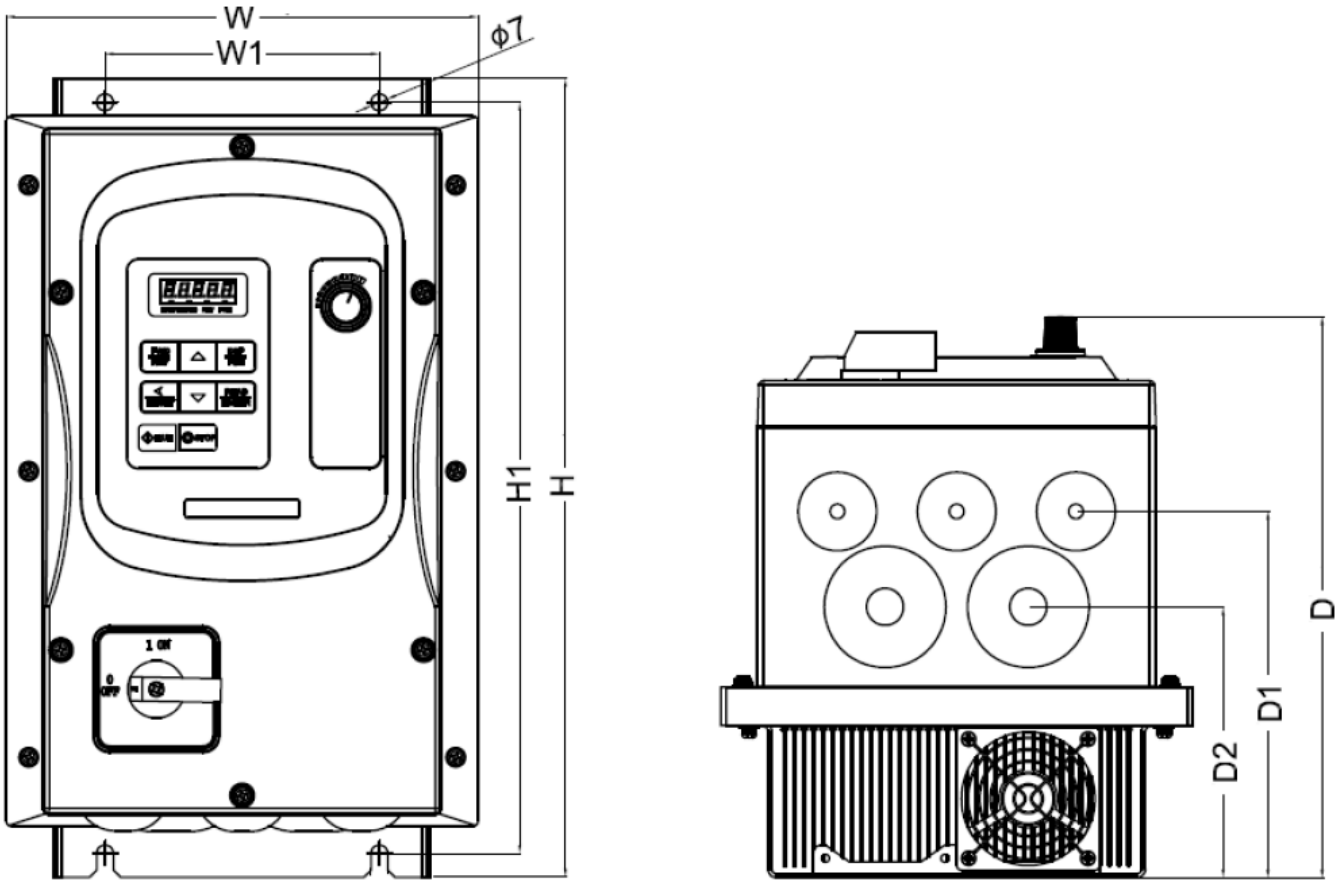

Frame 2

Inverter model	Dimensions in mm (inch)						NW in kg
	W	W1	H	H1	D	D1	
E510-405-SH3FN4S	198 (9.63)	115 (5.59)	335 (16.30)	315 (15.33)	235.3 (11.45)	153.6 (7.47)	5.9/(13.0)
	D2	∅					
	113.6 (5.53)	M6					

Installation Spaces

Provide sufficient air circulation space for cooling as shown below. Install the inverter on surfaces that provide good heat dissipation.

Single unit installation

Install the inverter verticality to obtain effective cooling.

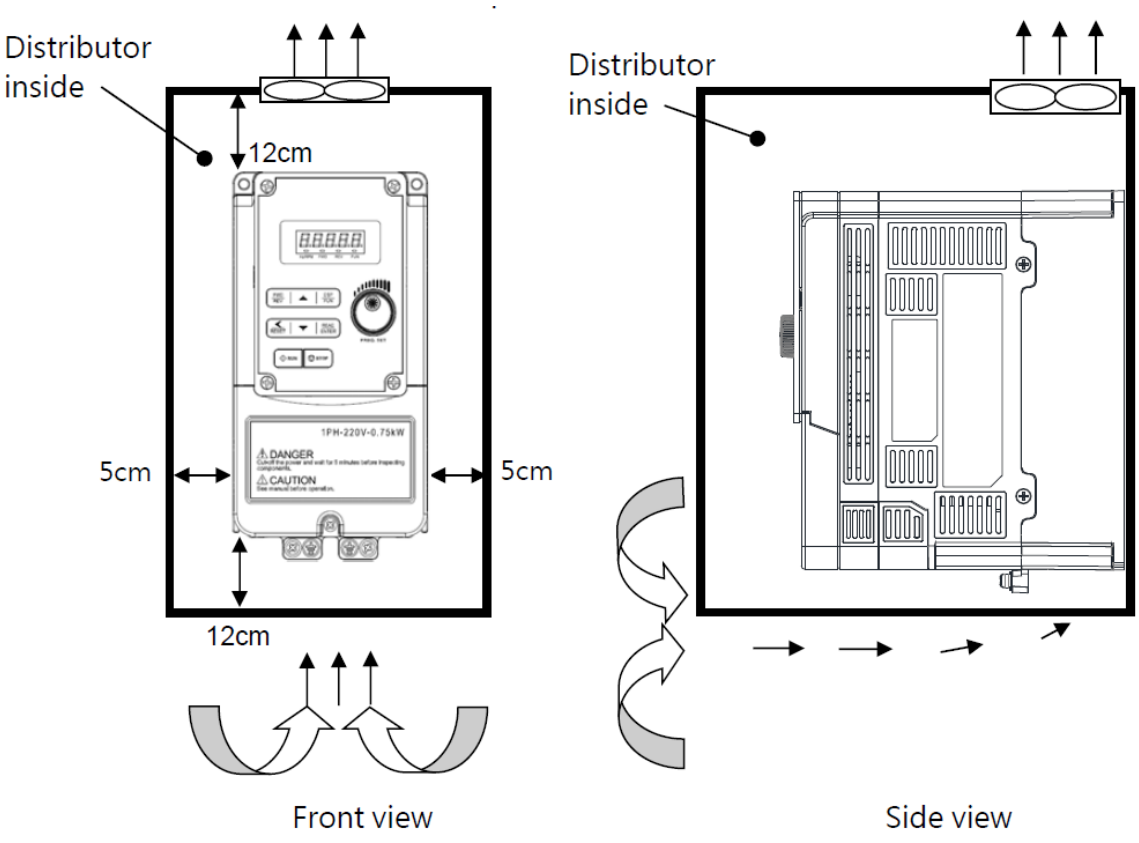

Side by side installation

Provide the necessary physical space and cooling based on the ambient temperature and the heat loss in the panel.

