Product data sheet L510s

Variable speed drive L510s-403-SH3F-P /IP20/ 2.2KW/ 3HP/ 380-480V

Features

- V/F and Sensorless Vector Control
- Rapid Stop
- Coated PCB
- PTC connection
- Built-in PID controller
- Simple settings and operating
- PTC connection
- Built-in Modbus Communication (RS485)
- Built-in BACnet
- Option Communication cards

Component name		L510s
Horse Power*(HP)*		3
Suitable Motor Capacity Capacity*(KW)*		2.2
Rated Output Current*(A)*		5.2
Rated Capacity*(KVA)*		4.0
Input Voltage Range*(V)*		Three-phase 380~480V, 50/60Hz
Allowable Voltage Fluctuation		-15%~+10%
Output Voltage range*(V)*		Three-phase 0~480V
Input current(A)		7.3
Enclosure		IP 20
Control Mode		V/F, SLV,
Frequency	Output Frequency	0.01~599.00Hz (V/Hz)
	Starting Torque	150%/3Hz(V/F), 150%/1Hz(Vector)
	Setting Resolution	Digital input: 0.01Hz
		Analog input:0.15Hz/60Hz or 0.012Hz/50Hz
	Setting	Keypad: Set directly with ▲▼ keys or the VR (potentiometer) on the keypad
		External input terminals : AVI(0/2-10V), ACI(0/4-20mA), Embedded potentiometer, Multifunction input UP/DOWN,
		Setting frequency by communication method.
	Frequency Limit	Lower and upper frequency limits, 3 skip frequency settings.
Run	Operation Set	Keypad Run, Stop button.
		External terminals: Multi- operation-mode(2 or 3 wire selection), Jog operation.
		Run signal by communication method.
Main Control Features	V/F Curve Setting	6 fixed curves and 1 customized curve.
	Carrier Frequency	1~16KHz (default 5kHz)
	Acceleration and Deceleration Control	2 sections of acceleration /deceleration. 4 of S curve parameters.
	Multifunction Input	19 functions (refer to group3 in the manual).
	Multifunction Relay Output	16 functions (refer to group3 in the manual).

Product data sheet

	Multifunction Analog Output	5 functions (refer to group4 in the manual), 1 point (0-10V).
	Main Features	Overload detection, 8 pre-set speeds, Auto-run, Acc/Dec switch(2 stages), Main/Alt run command select, Main/Alt frequency command select, PID control, Torque boost, V/F Start frequency, Fault reset.
Display	LED	Display: Parameter, Parameter value, Frequency, Line speed, DC voltage, Output voltage, Output current, PID feedback, Input and output terminal status, Heat sink temperature, Firmware version, Fault list.
	LED Status Indicador	Run / Stop / Forward / Reverse.
Protective Functions	Overload Capacity	150% for 1min every 10 min.
	Over Voltage	400V class :DC>820V,
	Under Voltage	400V class :DC<380V,
	Momentary Power Loss Restart	Inverter auto-restart after a momentary power loss.
	Stall Prevention	Stall prevention for Acceleration/ Deceleration/ Operation.
	Short-circuit Output Terminal	Electronic Circuit Protection.
	Grounding Fault	Electronic Circuit Protection.
	Other Protection Functions	Heatsink over temperature protection, Auto carrier frequency reduction with temperature rise, Fault output, Reverse prohibit, Number of restart attempt, Parameter lock, PTC over temperature protection, Over voltage suppression function.
Certification	CE, UL, cUL, RCM,	
Communication control	Standard built-in RS485 communication (Modbus), one to one or one to many control, Built-in BACnet, Profibus, DeviceNet, CANopen, TCP/IP by gateway.	
Environment	Operating temperature	–10 ~ 50℃ with fan, –10 ~ 40℃ without fan,
	Storage temperature	-20~ 60℃
	Humidity	95% RH or less (no condensation) Compliance with IEC 60068 -2-78.
	Vibration	Frequency: 10Hz - 150Hz - 10Hz Amplitude(0.3mm): 10Hz ≦f ≦57Hz Acceleration(2G): 57Hz ≦f ≦150Hz (According to IEC60068-2-6 standard)
	EMC Compliance	EN61800-3, First Environment.
	LVD Compliance	EN50178
	Electrical Safety	UL508C
	Protection Level	IP 20

External View

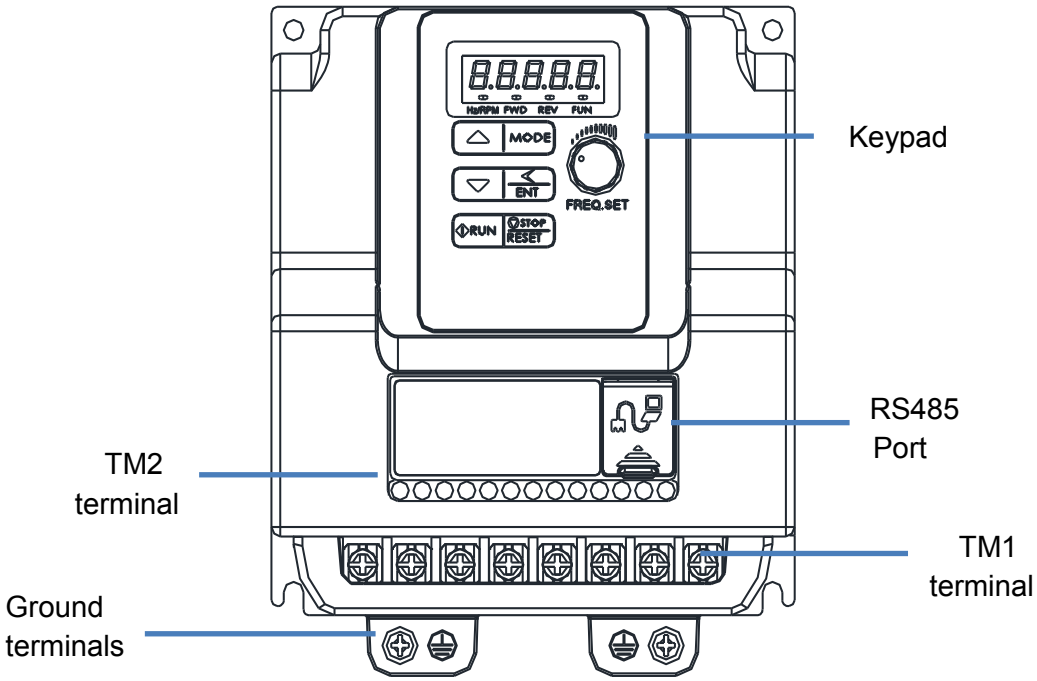

Inverter De-rating Based on Carrier Frequency and Temperature

Curves below show the applicable output current de-rate due to setting of carrier frequency and the ambient operating temperatures of 50 ℃.

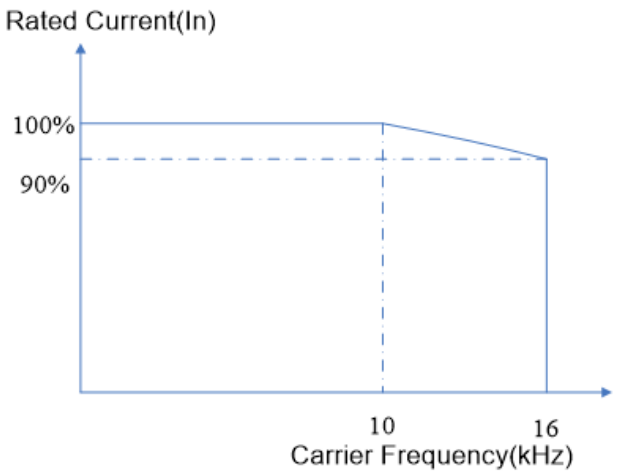

General Wiring Diagram (single phase)

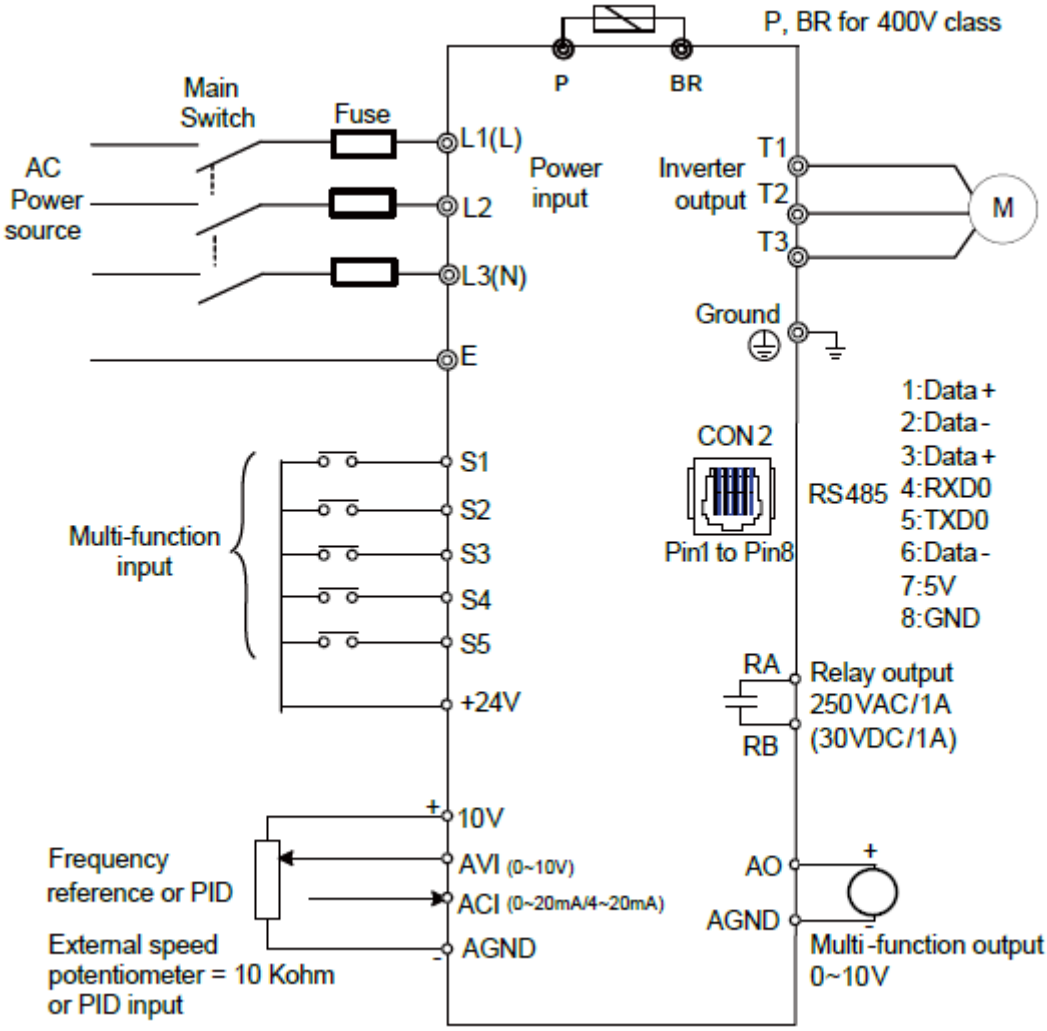

Main Circuit Terminals

Terminal symbols	TM1 Function Description
L1(L)	Main power input, three phase(400V): L1 / L2 / L3
L2	
L3(N)	
P*	External braking resistor
BR*	
T1	Inverter output, connect to U, V, W terminals of motor
T2	
T3	
⏚	Ground terminal

Dimensions

Product data sheet

Frame2 400V

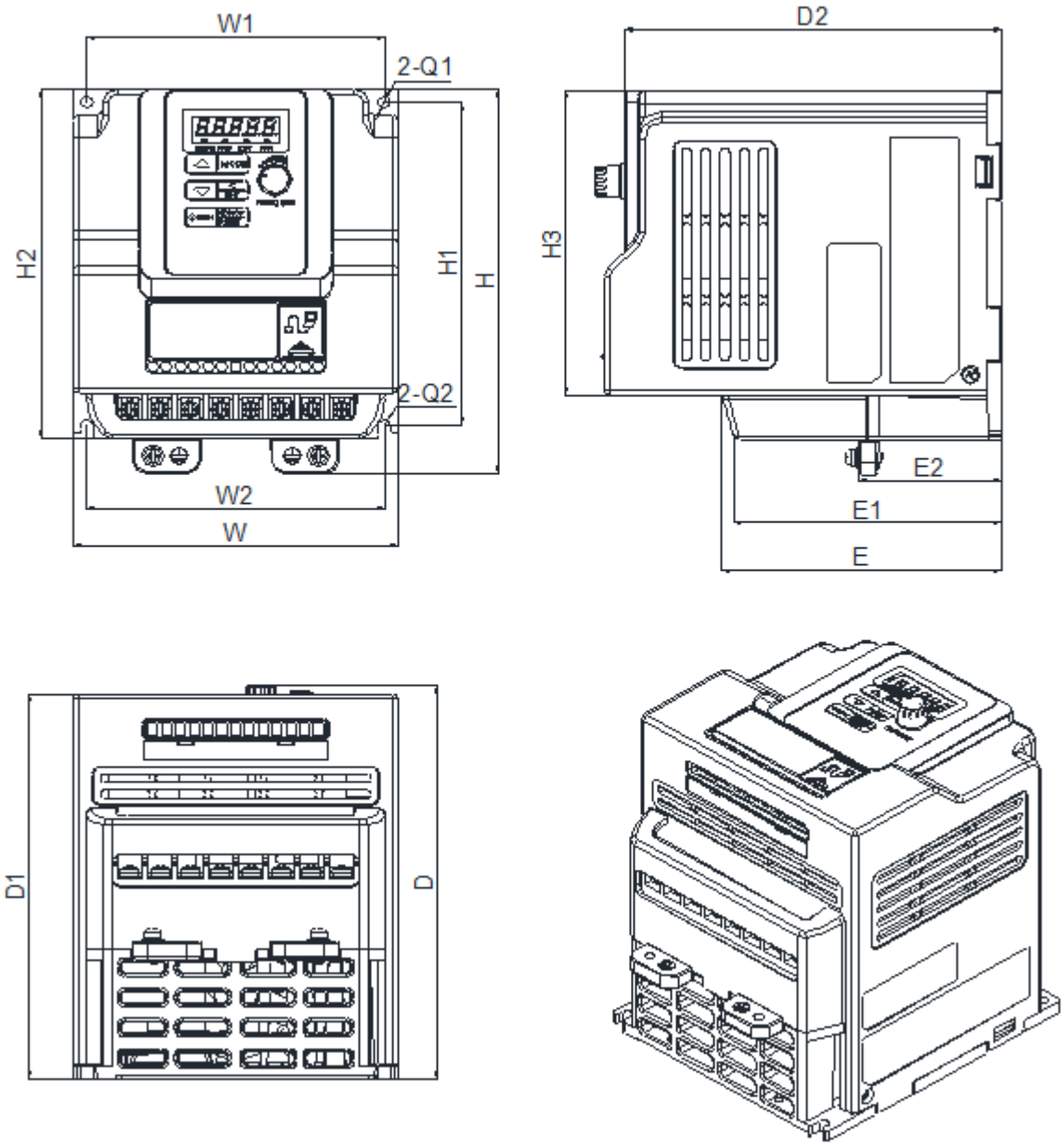

Inverter Model	Dimension (mm)														NW (kg)
	W	W1	W2	H	H1	H2	H3	D	D1	D2	E	E1	E2	Q1	Q2	
L510-403-SH3F-P	118	108	108	144	121	131	114	150	144.2	136.4	101.32	96.73	51.5	4.3	118	1.5

Installation Spaces

Provide sufficient air circulation space for cooling as shown below. Install the inverter on surfaces that provide good heat dissipation.

Single unit installation

Install the inverter verticality to obtain effective cooling

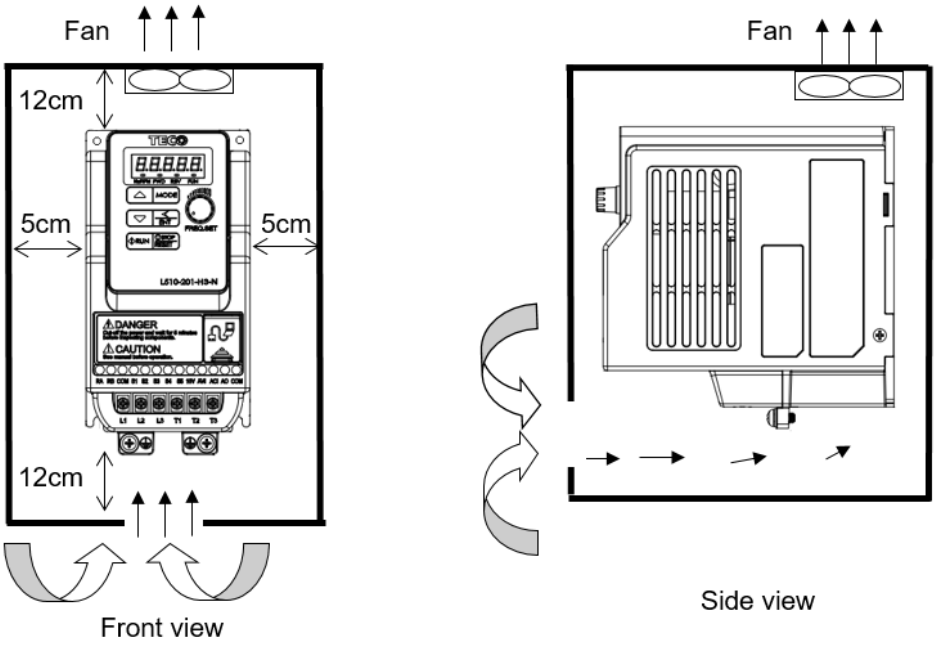

Side by side installation.

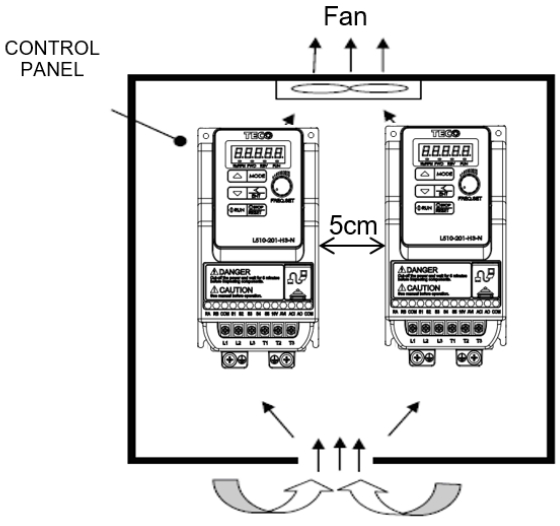

Provide the necessary physical space and cooling based on the ambient temperature and the heat loss in the panel.