Product data sheet

Variable speed drive A510-4150-SG3-IP20/NEMA1, 110KW, 150HP, 380-460V

Features

■Dual core processors driving

■High efficiency PM motor

■Advanced motor auto-tune function

■200% 0.5Hz Starting Torque

■Conformity to global standards

■Downsize design

■Hardware Switch Off function suppression

■Intelligent overvoltage

Component name				A510s
Inverter Capacity(HP)				150
Output Rating	HD	Rated Output Capacity(KVA)		165
		Rated Output Current(A)		216
		Maximum Applicable Motor	(HP)	150
			(KW)	110
	ND	Rated Output Capacity(KVA)		191
		Rated Output Current(A)		250
		Maximum Applicable Motor	(HP)	175
			(KW)	132
	Maximum Output Voltage(V)			Three Phase, 380~480V
	Maximum Output Frequency(Hz)			0.1~599.0Hz
Input Power	Rated Voltage, Frequency			Three Phase, 380V to 480V, 50/60Hz
	Allowable Voltage Fluctuation			-15% ~ +10%
	Allowable Frequency Fluctuation			±5%
Braking transistor				Built-in
Control characteristics	Display			LCD keypad
	Control Modes			V/F, V/F+PG, SLV, SLV2, SV, PMSV, PMSLV (SVPWM Modulation)
	Output Frequency			0.1Hz~599.0Hz
	Frequency Accuracy			Digital references: ±0.01%(-10~+40 ℃), Analog references: ±0.1%(25 ℃ ± 10 ℃),
	Speed Control Accuracy			±0.1% (Sensor Vector Control Mode, SV) *1 ±0.5% (Sensorless Vector Control Mode, SLV)*1
	Frequency setting Resolution			Digital references: 0.01Hz, Analog references: 0.03Hz at 60Hz
	Output Frequency Resolution			0.01Hz
	Overload Tolerance			Heavy Duty Mode (HD): 150% rated current for 60sec, 200% current for 2sec. (Factory default), Normal Duty Mode (ND): 120% rated current for

		60sec.
	Frequency Setting Signal	0 to +10V, -10V to +10V , 4 to 20mA or pulse train input

Product data sheet

Control characteristics	Acceleration/ Deceleration Time	0.0~6000.0 second (separately set acceleration and deceleration time)
	Voltage/Frequency Characteristics	15 fixed and one customized V/f curve based on parameters
	Braking Torque	Approximate 20%, braking transistor built in.
	Main Control Functions	Auto tuning, Zero Servo, Torque Control, Position Control, Droop, Soft-PWM, Over-Voltage Protection, Dynamic Braking, Speed Search, Frequency Traversing, Momentary Power Loss Restart, PID Control, Automatic Torque Compensation, Slip Compensation, RS-485 Communication, Close Loop Control with PG, Simple PLC Function, Two analog Outputs, Safety Input Contact.
	Other Functions	Records of Power ON and Operation Time, 30 Fault History Records and Latest Fault State Record, Energy-Saving Function, Phase Loss Protection, DC Braking, Dwell, S Curve Acceleration and Deceleration, Up / Down Operation, Modbus Communication Protocol, Output of Pulse Multiple, Display of Engineering Unit, SINK / SOURCE Selection, RTC function in Enhanced LCD type
Protection Functions	Stall Protection	Current level can be adjusted (in acceleration or constant speed; it can be set separately. In deceleration, it can be set with or without stall protection)
	Over Current(OC) and Output Short-circuit(SC) Protection	It stops the motor when the output current exceeds 200% of the inverter rated current
	Inverter Overload Protection(OL2)	Inverter will be stopped when the output is higher than below conditions. Heavy Duty Model (HD): 150% rated current for 60sec, 200% rated current for 2sec. (Factory default), carrier frequency is from 2KHz to 8KHz. Normal Duty Mode(ND): 120% rated current for 60sec, carrier frequency is 2KHz
	Motor Overload Protection(OL1)	Electrical overload protection curve
	Over Voltage Protection(OV)	If the main circuit DC voltage is over 820V (400V class), the motor stops running.
	Under Voltage Protection(UV)	If the main circuit DC voltage falls below 380V (400V class), the motor stops running.
	Momentary power loss restart	Power loss exceeds 15ms. You can set the function of momentary power loss restart up to 2sec
	Overheat Protection(OH)	Thermistor sensor on heatsink
	Ground Fault Protection(GF)	Protection by current detection circuit
	Charge Indicator	When main circuit DC voltage ≧50V, the CHARGE LED is on
	Input / Output Phase Loss Protection (IPL / OPL)	If the IPL / OPL function acts, the motor stops rotation automatically

Product data sheet

Protection	Short-circuit Current Rating (SCCR)		Per UL 508C, the drive is suitable for use on a circuit capable of delivering not more than 100KA symmetrical amperes(rms) when protected by fuses given in the fuse table
Environment Specification	Location		Indoor (Protected from corrosive gases and dust)
	Ambient Temperature		-10~ +40℃ without de-rating (IP20/NEMA1), -10~ +50℃ (IP00); with de-rating, its maximum operation temperature is 60℃
	Storage Temperature		-20~ +70℃
	Humidity		95% RH or less (no condensation)
	Altitude and Vibration		Altitude of 1000 meters or lower,1.0G, in compliance with IEC60068-2-6
	Pollution Degree		Meet 60721-3-3 Class 3C3
Communication Function			Built-in RS-485 as standard (Modbus protocol with standard RJ45)
Electromagnetic Interference(EMI)			In compliance with EN61800-3 standard, 400V 60HP or below EMI filter built-in.
Electromagnetic Compatibility (EMS)			In compliance with EN61800-3 standard
Certification		CE	In compliance with EN61800-3 (CE & RE) and EN61800-5-1 (LVD)
		UL	UL508C
Options	Communication Option Cards		Profibus DP, CANopen, EtherCAT, EtherNet/IP
	Encoder Cards (Induction Motors)		Open Collector, Line Driver
	Encoder Cards (PM Motors)		Line Driver, Resolver, Sin-Cos Incremental, Absolute
	Bluetooth		Bluetooth Keypad

Product data sheet

External View

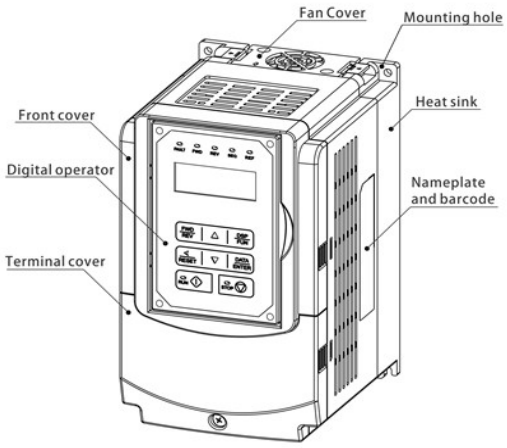

(Wall-mounted type, IEC IP20)

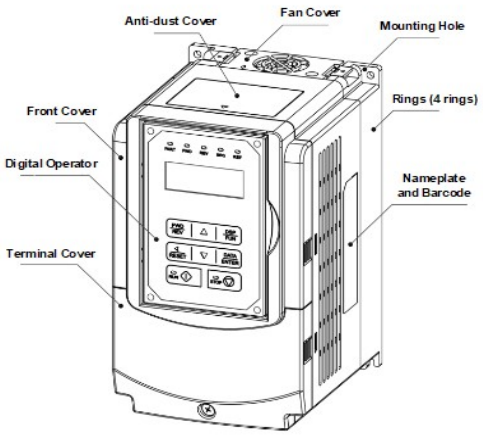

(Wall-mounted type, IEC IP20, NEMA1)

General Wiring Diagram

Product data sheet

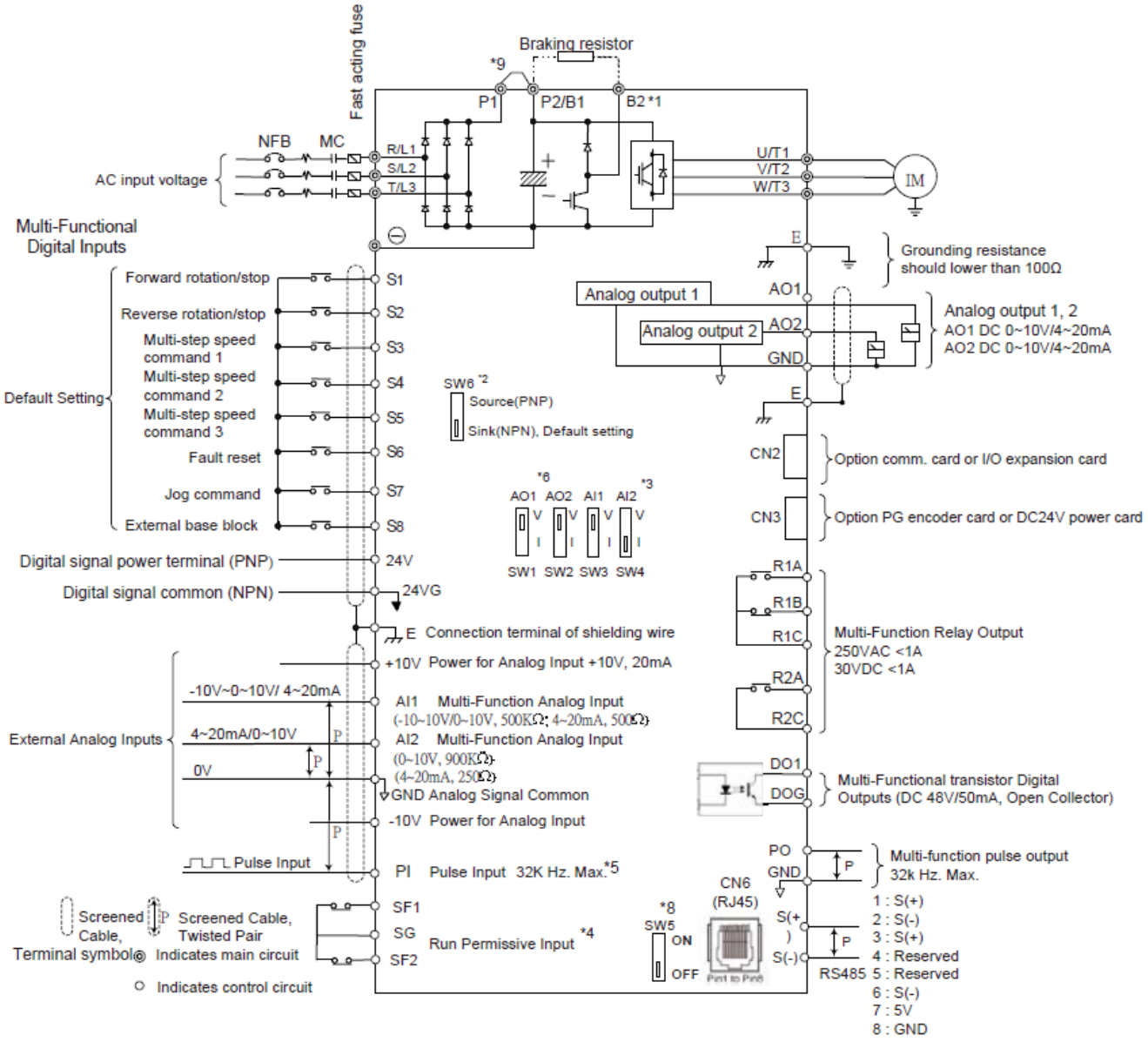

Notes:

*1: Models 200V 1 ~ 25HP and 400V 1 ~ 30HP or lower ratings have a built-in braking transistor. To use this braking transistor a braking resistor can be connected between B1 and B2.Besides, for 400V class 40HP, there is built-in braking transistor model, but without DCL terminals.

*2: Use SW6 to select between Sink (NPN, with 24VG common) or Source (PNP, with +24V common) for multi-function digital input terminals S1~S8.

*3: Use SW3/SW4 to switch between voltage (0~10V) and current (4~20mA) input for Multi-function analog input 2 (AI2). Besides please also check parameter 04-00 for proper setting.

*4: Run Permissive input SF1 and SF2 is a normally closed input. This input should be closed to enable the inverter output. To activate this input remove the jumper wire between SF1/ SF2 and SG.

*5: When using the open collector for pulse input, it doesn't need resistance because of built-in pull-up resistance.

*6: AO1/AO2 default setting is 0~+10V.

*7: Both 200V class 50HP~150HP and 400V class 100HP~425HP have built-in DC reactors.

*8: It need turn on the switch for the terminal resistor RS485 in the last inverter when many inverters in parallel connection.

*9: Only the model 200V 3~40HP and 400V 5~75HP provide P1 terminal,for external DCL connected between P1 and P2 , P1 and P2 are short-circuited before shipping out from the factory.

Dimensions

Product data sheet

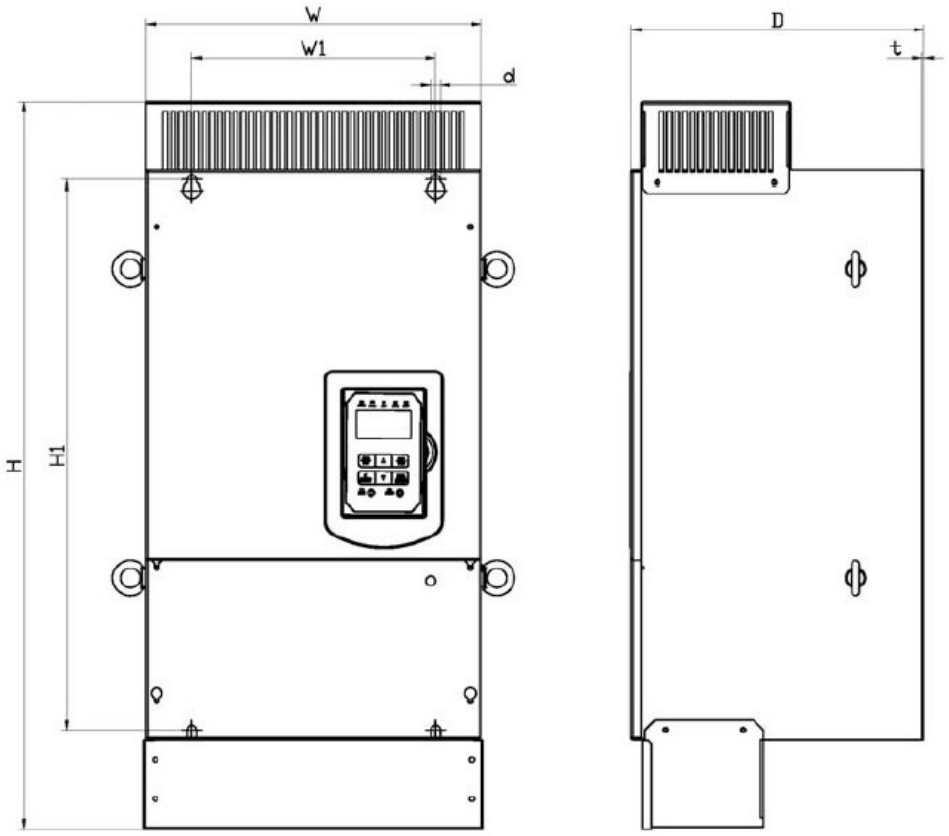

Inverter model	Dimensions in mm (inch)							
	W	H	D	W1	H1	t	d	NW in kg(lbs)
A510-4150-SG3	463.5 (18.25)	1105 (43.50)	324.5 (12.78)	320 (12.60)	760 (29.92)	1.6 (0.06)	M10	81 (178.57)

Installation Spaces

When installing the inverter, ensure that inverter is installed in upright position (vertical direction) and there is adequate space around the unit to allow normal heat dissipation as per the following figure.

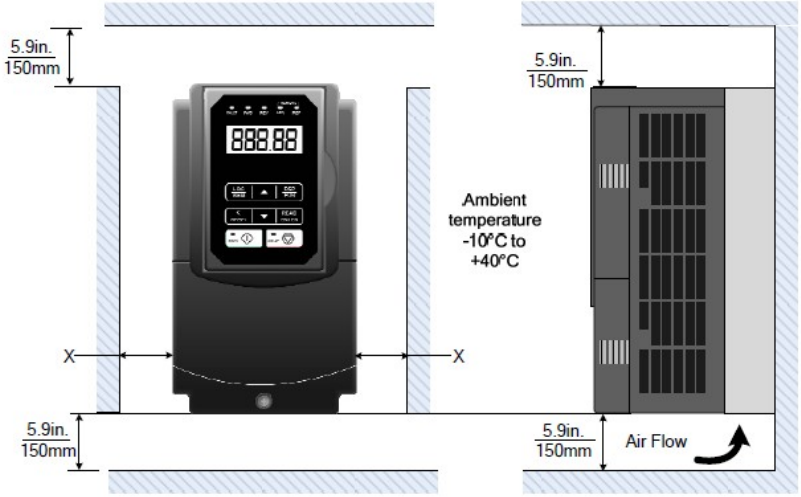

X = 1.18” (30mm) for inverter ratings up to 18.5kW

X = 1.96” (50mm) for inverter ratings 22kW or higher

Product data sheet

Inverter De-rating Based on Temperature

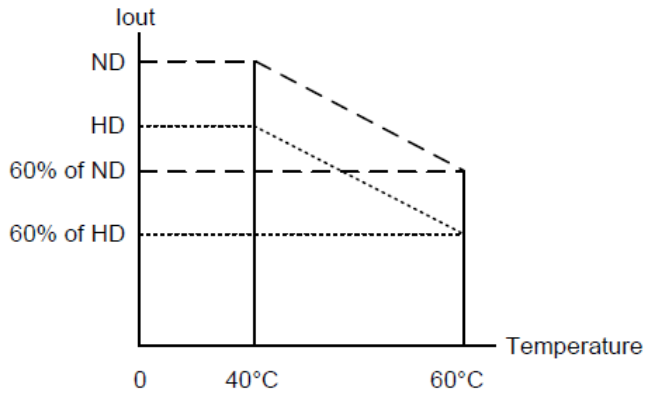

Important Note: The inverter heatsink temperature can reach up to 90°C/ 194°F during operation; make sure to use insulation material rated for this temperature.