Product data sheet E510s

Variable speed drive E510-2P2-SH1F-IP20/ 0.4KW/ 0.5HP/ 200-240V

Features

- Advanced Sensorless Vector Control
- Integrated Safety Torque Off
- Fire Mode
- PTC connection
- Built-in PID controller and PLC function
- Simple settings and operating
- PTC connection
- Built-in Modbus Communication (RS485)
- Built-in BACnet
- Option Communication cards

Component name		E510s
Horse Power*(HP)*		0.5
Suitable Motor Capacity Capacity*(KW)*		0.4
Rated Output Current*(A)*		3.1
Rated Capacity*(KVA)*		1.2
Input Voltage Range*(V)*		Single-phase 200~ 240V, 50/60Hz
Allowable Voltage Fluctuation		-15%~ +10%
Output Voltage range*(V)*		Three-phase 0~240V
Input current(A)		8.5
Allowable Momentary Power Loss Time*(Sec.)*		2
Enclosure		IP 20
Control Mode		V/F, SLV, PMSLV
Frequency	Output Frequency	0.01~599.00Hz (V/Hz)
	Starting Torque	150%/3Hz(V/F), 150%/1Hz(Vector)
	Speed Control Ratio	1:50
	Setting Resolution	Digital input: 0.01Hz
		Analog input:0.06Hz/60Hz
	Setting	Keypad: Set directly with ▲▼ keys or the VR on the keypad
		External input terminals： AI÷AI2 (0/2-10V, 0/4-20mA), Embedded potentiometer, Multifunction input UP/DOWN,
		Setting frequency by communication method.
	Frequency Limit	Lower and upper frequency limits, 3 skip frequency settings.
Run	Operation Set	Keypad Run, Stop button.
		External terminals: Multi- operation-mode(2 or 3 wire selection), Jog operation.
		Run signal by communication method.
Main Control Features	V/F Curve Setting	15 fixed curves and 1 customized curve.
	Carrier Frequency	1~16KHz
	Acceleration and Deceleration Control	2 sections of acceleration /deceleration time setting (0.1~ 3600.0 *Sec*), 4 of S curve setting.

Product data sheet

	Multifunction Input	35 functions (refer to group3 in the manual).
	Multifunction Relay Output	22 functions (refer to group3 in the manual).
	Multifunction Analog Output	5 functions (refer to group4 in the manual).
	Main Features	Overload detection, 16 pre-set speeds, Auto-run, Acc/Dec switch(2 stages), Main/Alt run command select, Main/Alt frequency command select, PID control, Torque boost, V/F Start frequency, Fault reset, Fire mode, Multi-Pump function.
Display	LED	Parameter, Parameter value, Frequency, Line speed, DC voltage, Output voltage, Output current, PID feedback, Input and output terminal status, Heat sink temperature, Firmware version, Fault list.
	LED Status Indicador	Run / Stop / Forward / Reverse, and etc.
Protective Functions	Overload Protection	OL1 Electrical overload protection curve, OL2 HD 150% for 60s, ND 120% for 30s.
	Over Voltage	200V class :DC>410V,
	Under Voltage	200V class :DC<190V,
	Momentary Power Loss Restart	Inverter auto-restart after a momentary power loss.
	Stall Prevention	Stall prevention for Acceleration/ Deceleration/ Operation.
	Short-circuit Output Terminal	Electronic Circuit Protection.
	Grounding Fault	Electronic Circuit Protection.
	Other Protection Functions	Protection for overheating of heat sink, Fault output, Reverse prohibit, Prohibit for direct start after power up and error recovery, Parameter lock up, STO (Safety Torque Off). Built-in RS485 communication for one to one or one to many. Built-in BACnet communication for building control. (Ex ： Fire protection system, Air conditioning system, Monitoring system and Access control system).
	brake transistor	Built in.
Communication control	Standard built-in RS485 communication (Modbus), one to one or one to many control.	
Environment	Operating temperature	IP20/NEMA 1 Type: –10 ~ 50℃ (without stick on type dust cover.) –10 ~ 40℃ (with stick on type dust cover.) IP66/NEMA 4X Type : -10~50℃
	Storage temperature	-20~ 60℃
	Humidity	95% RH or less (no condensation) Compliance with IEC 60068 -2-78.
	Shock	Frequency : 10Hz to 150Hz and return to 10Hz, Amplitude : 0.3mm (10Hz to 50Hz), Acceleration : 2G (50Hz to 150Hz), (According to IEC60068-2-6 standard).
	Enclosure	IP20/NEMA1.

	Altitude	It is required to derate 1% of output current at each additional 100m, the maximum altitude is 2000m.

External View

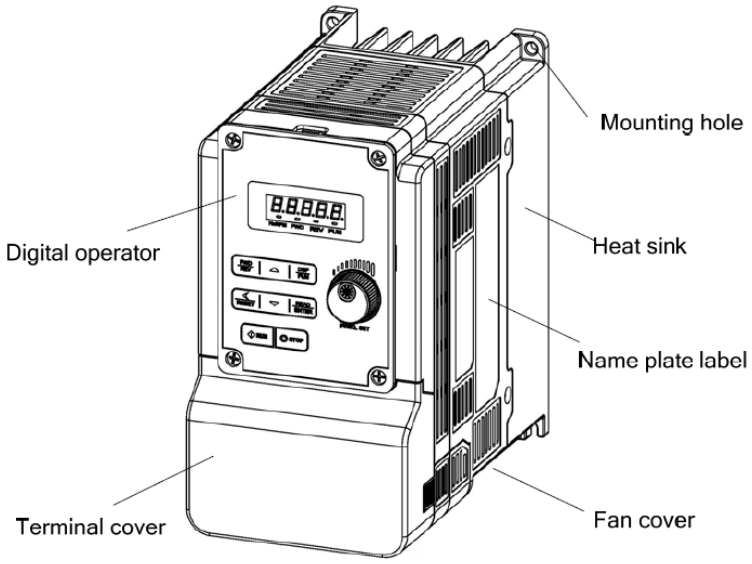

Inverter De-rating Based on Temperature

Curves below show the applicable output current de-rate due to setting of carrier frequency and the ambient operating temperatures of 40 and 50 ℃.

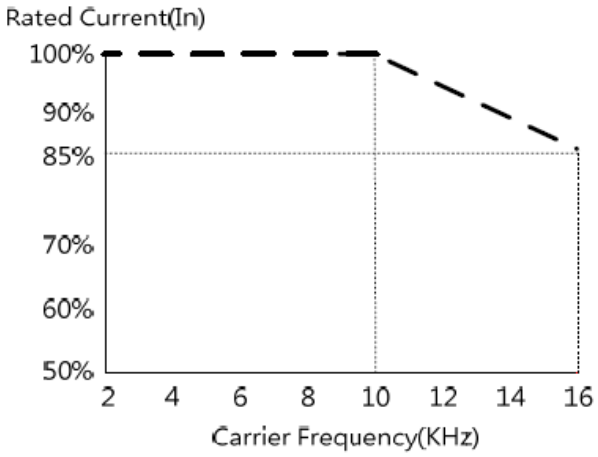

Notes:

••••••••• De-rate curve for ambient temperature of 40 ℃

– – – – De-rate curve for ambient temperature of 50 ℃

General Wiring Diagram (single phase)

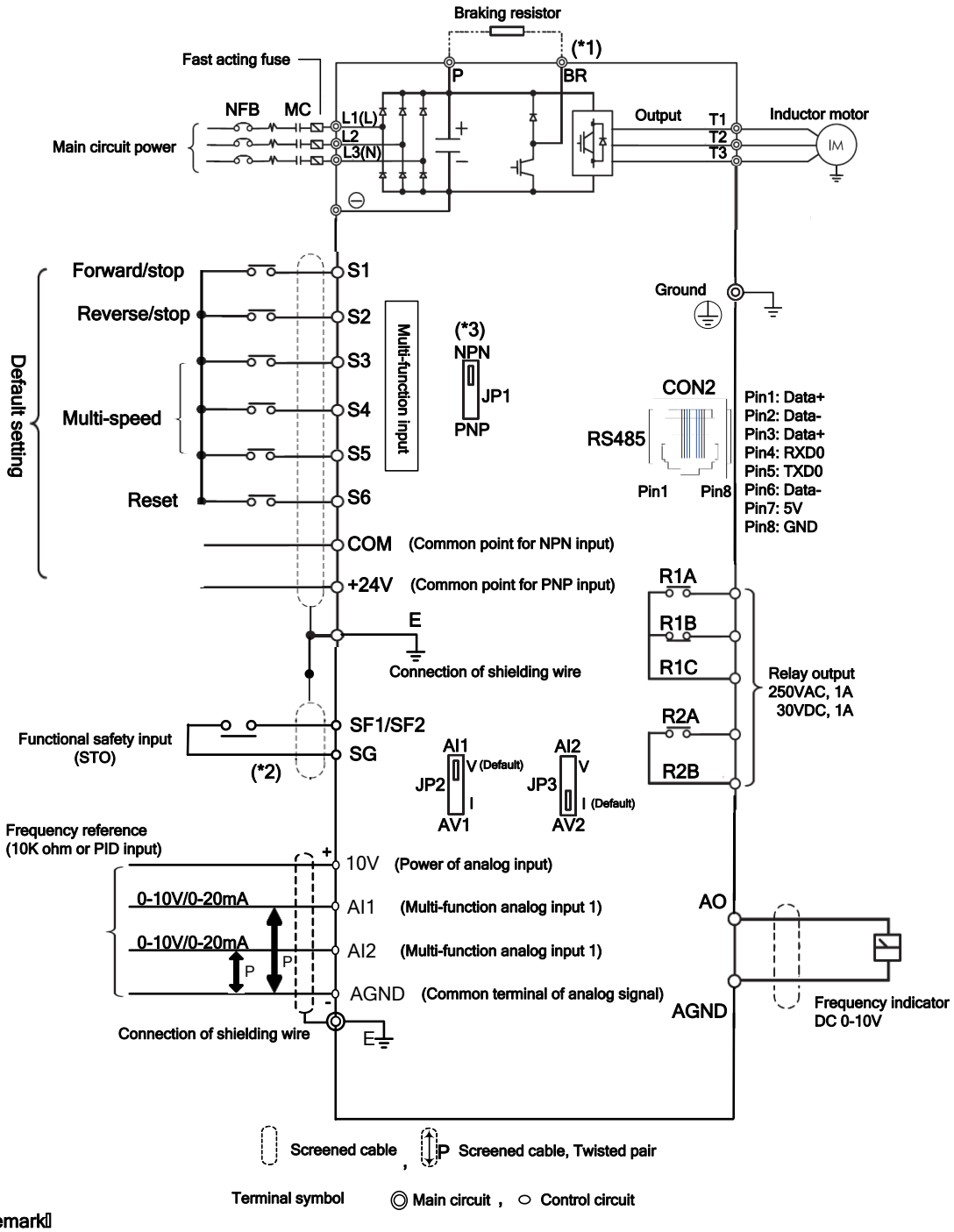

Remark：

(*1) Only the IP20 200V 0.5-25HP and 400V 1-40HP with built-in braking transistor provide terminal B2. The braking transistor can be connected directly between P and BR.

(*2) Safety input connector (SF/SG) should be shorted so that inverter outputs properly. When the safety input is used, please be sure to remove the short-pin between SF/SG.

(*3) The multi-function digital input terminals S1-S6 can be set to Sink(NPN) and Source(PNP) by JP1.

Dimensions

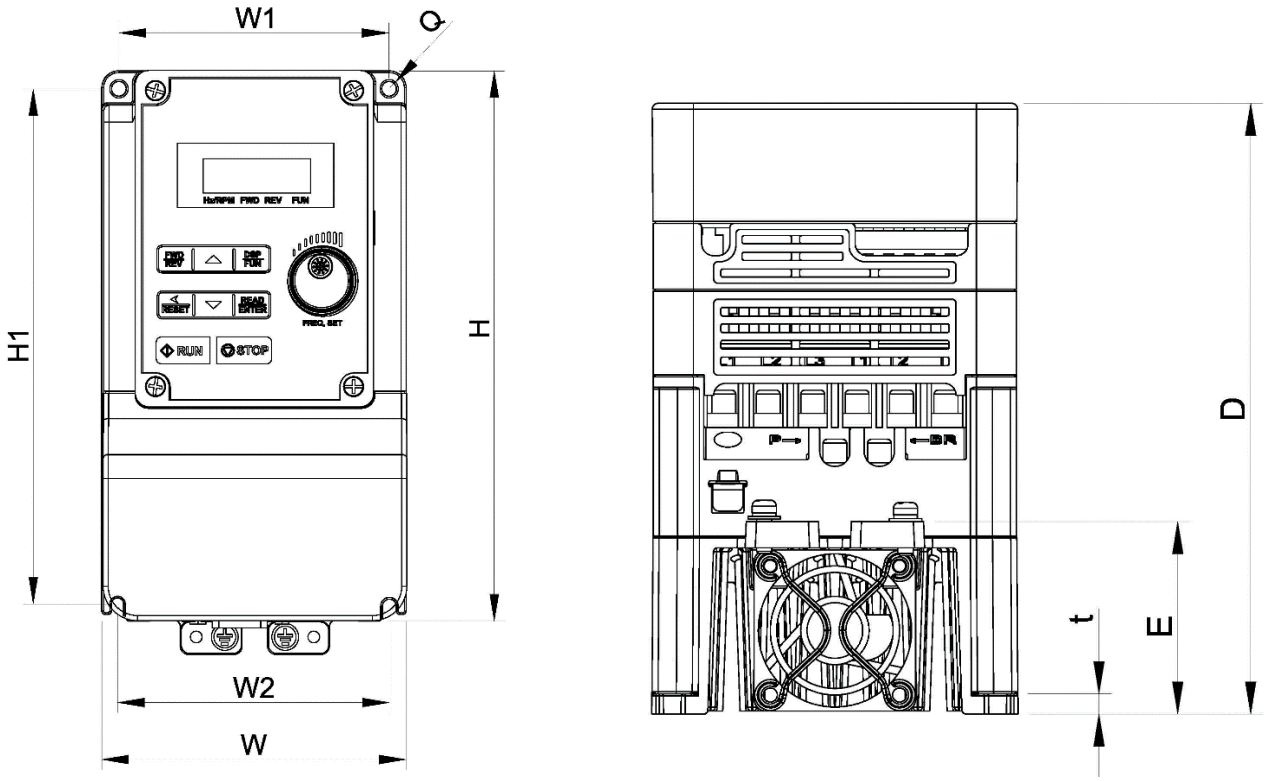

Inverter Model	Dimensions in mm (inch)									Net Weight in kg/(lbs)
	W	W1	W2	H	H1	D	E	t	Q	
E510-2P2-SH1F	90.6 (3.57)	80.5 (3.17)	80.5 (3.17)	164 (6.46)	153 (6.02)	151.4 (5.96)	47 (1.85)	5 (0.19)	M4	1.7/(3.8)

Installation Spaces

Provide sufficient air circulation space for cooling as shown below. Install the inverter on surfaces that provide good heat dissipation.

Single unit installation

Install the inverter verticality to obtain effective cooling

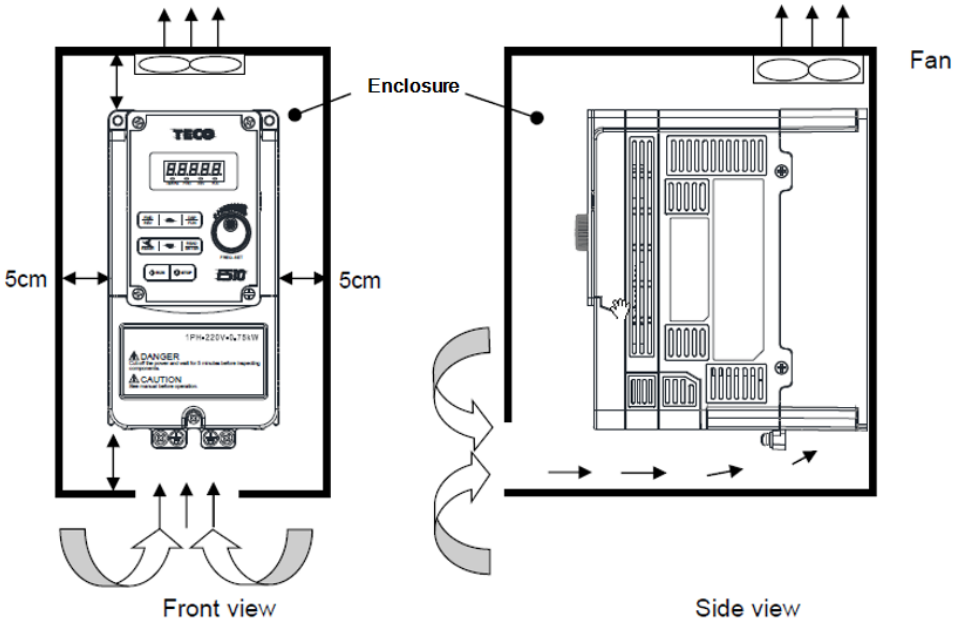

Side by side installation

Provide the necessary physical space and cooling based on the ambient temperature and the heat loss in the panel

