| SPECIFICATION TABLE OF 3-PHASE SQUIRREL CAGE INDUCTION MOTOR | CUSTOMER | | USER | |
|---|---|---|---|---|
| | INQ. NO. | | EQUIPMENT | |
| | JOB NO. | | MACHINE | |
| | TOTAL SETS | | ITEM NO. | |

| Item | Terms | Description | | | |
|---|---|---|---|---|---|
| 1 | Model | AESV4S | | | |
| 2 | Code or Standard | Dimensions | Frame Assignment | Performance | Test |
| | | IEC | IEC | IEC | IEC |
| 3 | Rating | 3KW/4HP 2Pole 400-415\|440-460 Volt 3 Phase 50\|60 Hz | | | |
| 4 | Service Duty | ontinuous Rating , Service Factor 1.0 | | | |
| 5 | Starting Method | Full voltage direct on line | | | |
| 6 | Rotation | Facing The Drive End : CW(ClockWise), Available for Bi-Direction | | | |
| 7 | Drive Method | Direct Coupling | | | |
| 8 | Environment | Amb. Temp. : - 15 ~ 40 ℃ | | | |
| | | Humidity : Less Than 90 %RH | | | |
| | | Altitude : Up to 1000 M | | | |
| 9 | Enclosure & Protection | IP66 : Totally Enclosed | | | Indoor |
| 10 | Cooling | IC411 : Self External Fan, Surface Cooling | | | |
| 11 | Mounting | IM2001 : HS, Foot | | | |
| 12 | Dimensions | Dr# TTAKG25087-005 | | Frame No ： 100L | |
| 13 | Frame & Bracket | Frame : Cast iro | | Bracket : Cast iron | |
| 14 | Fan & Fan Cover | Fan :Plastic | | Fan Cover :Steel plate | |
| 15 | Terminal Box | Cast iron | | | |
| 16 | Lead Terminals | T01X6 | | | |
| 17 | Lubricant | | | | |
| 18 | Painting | Color : MUNSELL 3.5 GY 6.9/0.4 | | | |
| 19 | Stator Winding | Ins. Class H Connection:2△/2Y | | | |
| 20 | Rotor Conductor | Al-Die Cas | | GD^2 ： 0.0039 Kg-m^2 | |
| 21 | Starting & Operating Performance | LRC Amp | | LRT/FLT 100 % | |
| | | Hz/V | 50/400 | 50/415 | 60/440 | 60/460 |
| | | %Load | 100 | | | |
| | | Amp. | 5.59 | 5.38 | 5.0 | 4.8 |
| | | Eff.% | 89.1 | 89.1 | 89.5 | 89.5 |
| | | P.F.% | 0.87 | 0.87 | 0.88 | 0.88 |
| | | R.P.M. | 2905 | 2905 | 3500 | 3500 |
| | | LRC/FL | 9.0 | 9.0 | 9.5 | 9.5 |
| | *LRC=Lock Rotor Current | LRT/FL | 2.8 | 2.8 | 2.2 | 2.2 |
| | *LRT/FLT=Lock Rotor Torque/Full Load Torque | BDT/FL | 3.2 | 3.2 | 2.3 | 2.3 |
| | *FLT=Full Load Torque | Temp. Rise Limit. (Resistance) Stator 80 ℃ AT SF1.0 | | | | |
| 22 | Approximate Weight | | | | |
| 23 | Note | 1.Tolerances according to IEC60034-1.<br>2.With tropical proof. | | | |

**FOR APPROVAL**

Please confirm or comment, and return within 7 business days. Otherwise, these drawings will be deemed as certified and approved.

Approved by :
Order No. P3257014T1

| APPD. | | | TECO ELEC. & MACH. CO., LTD. | DWG NO. 32057A001-00023 |
|---|---|---|---|---|
| CHKD. | | | | |
| DWN. | | | | REV.00 1/1 |

| TECO | OUTLINE DIMENSIONS<br>3-PHASE INDUCTION MOTOR | MOTOR TYPE:<br>AESV4S |
|---|---|---|
| DATE | | FRAME NO. 100 |

| Pole | HP | kW | Hz | VOLT | r/min |
|---|---|---|---|---|---|
| 2 | 4 | 3 | 50/60 | 400-415V/440-460V | 3000/3600 |

| Ins | Rating | Dimension in | Approx Weight | Bearings |
|---|---|---|---|---|
| H | CONT. | mm | | DE: 6206-ZZC3 NDE: 6206-ZZC3 |

Totally Enclosed Fan Cooled Type, Squirrel Cage Rotor.

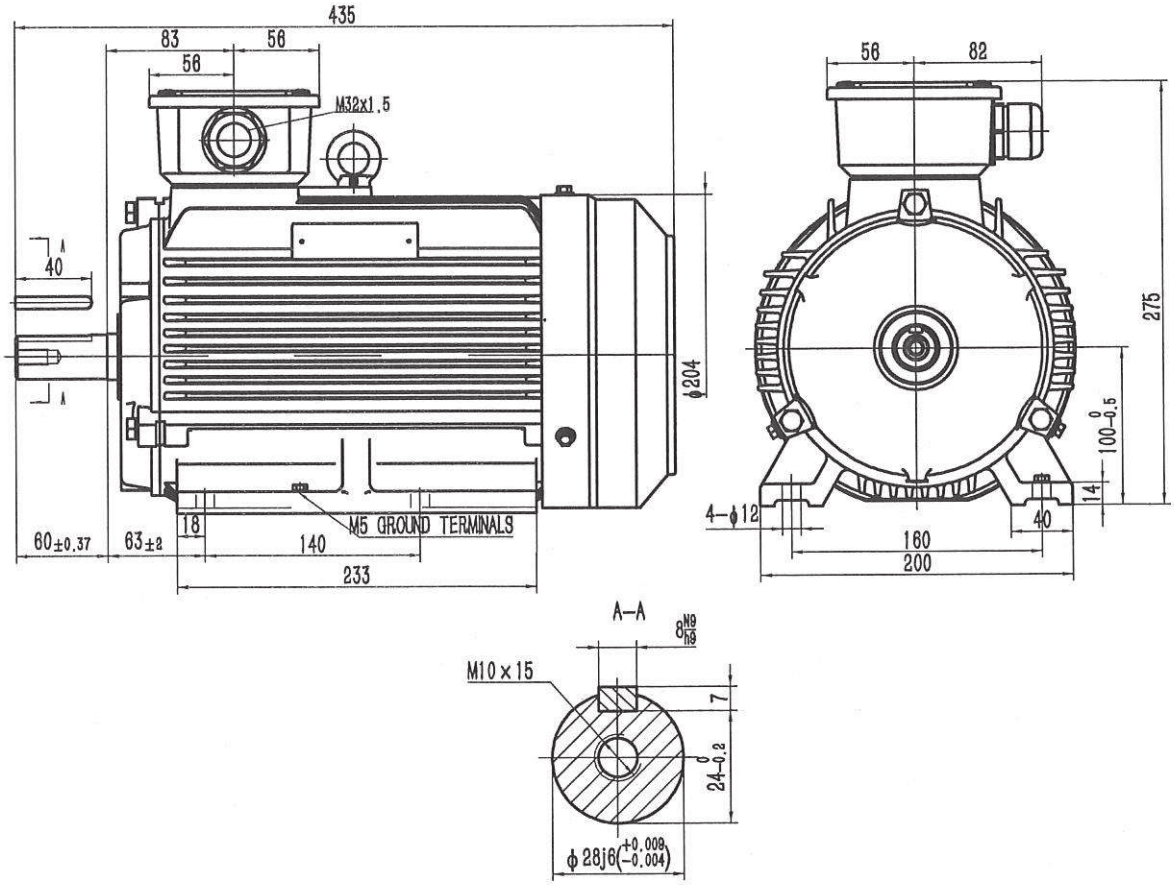


**FOR APPROVAL**

Please confirm or comment, and return within 7 business days. Otherwise, these drawings will be deemed as certified and approved.

Approved by :
Order No. P3257014T1

| | | | |
|---|---|---|---|
| DWN. | | . . | 東元電機股份有限公司<br>TECO Electric & Machinery Co., Ltd.<br>WUXI |
| CHKD. | | . . | |
| APPD. | | . . | |

DWG NO. TTAKG25087-005