SPECIFICATION TABLE OF 3-PHASE SQUIRREL CAGE INDUCTION MOTOR	CUSTOMER		USER	
	INQ. NO.		EQUIPMENT	
	JOB NO.		MACHINE	
	TOTAL SETS		ITEM NO.	

Item	Terms	Description				
1	Model	AESV4S				
2	Code or Standard	Dimensions	Frame Assignment	Performance	Test	
		IEC	IEC	IEC	IEC	
3	Rating	5.5 kW/ 7.5 HP 2 Pole 400-415|440-460Volt 3 Phase 50|60 Hz				
4	Service Duty	Continuous Rating,Service Factor 1.0				
5	Starting Method	Full voltage direct on line				
6	Rotation	Facing The Drive End:CW(ClockWise),Available for Bi-Direction				
7	Drive Method	Direct Coupling				
8	Environment	Amb. Temp. : -15~ 40 ℃				
		Humidity : Less Than 90%RH				
		Altitude : Up to 1000 M				
9	Enclosure & Protection	IP66:Totally Enclosed				Indoor
10	Cooling	IC411:Self External Fan,Surface Cooling				
11	Mounting	IM2001:HS,Foot,Flange				
12	Dimensions	Dr# TTAKG25087-025		Frame No：132S1		
13	Frame & Bracket	Frame : Cast iron		Bracket : Cast iron		
14	Fan & Fan Cover	Fan :Plastic		Fan Cover :Steel plate		
15	Terminal Box	Cast iron				
16	Lead Terminals	TO1X6				
17	Lubricant	--				
18	Painting	Color : MUNSELL 3.5 GY 6.9/0.4				
19	Stator Winding	Ins. Class H Connection:2△/2Y				
20	Rotor Conductor	Al-Die Cast			GD^2: 0.0106 Kg-m^2	
21	Starting &Operating Performance	Hz/V	50/400	50/415	60/440	60/460
		%Load	100			
		Amp.	9.92	9.57	9	8.6
		Eff.%	90.9	90.9	90.2	90.2
	*LRC=Lock Rotor Current	P.F.%	88	88	89	89
	*LRT/FLT=Lock Rotor Torque/Full Load Torque	R.P.M,	2925	2925	3530	3530
	*FLT=Full Load Torque	LRC/FLC	850%	850%	850%	850%
		LRT/FLT%	200	200	200	200
		BDT/FLT%	300	300	320	320
		Temp.Rise Limit.(Resistance) Stator 80℃ AT SF1.0				
22	Approximate Weight					
23	Note	1.Tolerances according to IEC60034-1. 2.With tropical proof.				

FOR APPROVAL

Please confirm or comment, and return within 7 business days. Otherwise, these drawings will be deemed as certified and approved.

Approved by :
Order No. P4257028T1

APPD.			**TECO ELEC. & MACH. CO., LTD.**	DWG NO. **32057A001-00043**
CHKD.				
DWN.				REV.00 1/1

TECO	OUTLINE DIMENSIONS 3—PHASE INDUCTION MOTOR	MOTOR TYPE: AESV4S
DATE		FRAME NO. 132S

Pole	HP	kW	Hz	VOLT	r/min
2	7.5	5.5	50/60	400-415V/440-460V	3000/3600

Ins	Rating	Dimension in	Approx Weight	Bearings
H	CONT.	mm		DE: 6208-ZZC3 NDE: 6208-ZZC3

Totally Enclosed Fan Cooled Type, Squirrel Cage Rotor.

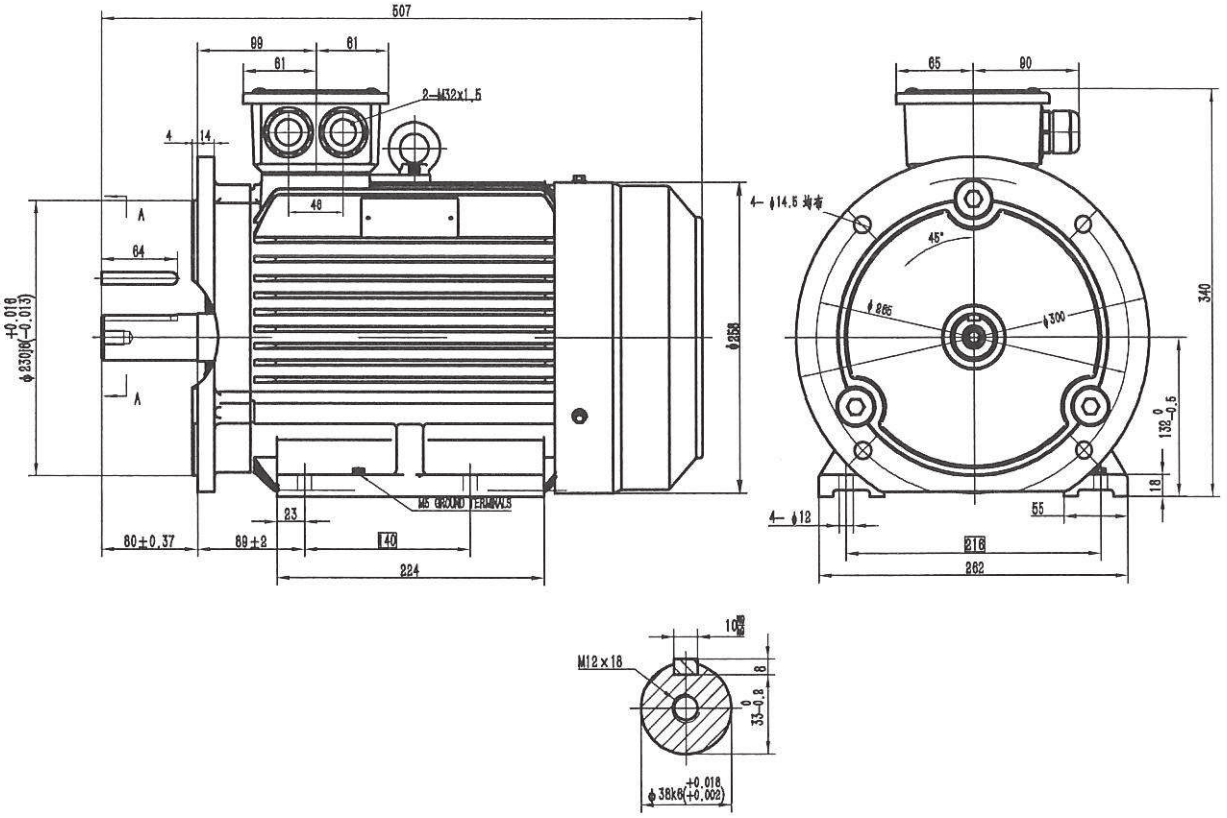

FOR APPROVAL

Please confirm or comment, and return within 7 business days. Otherwise, these drawings will be deemed as certified and approved.

Approved by :
Order No. P4257028T1

DWN.		· ·	東元電機股份有限公司 TECO Electric & Machinery Co., Ltd. WUXI	DWG NO. TTAKG25087-025
CHKD.		· ·		
APPD.		· ·		