SPECIFICATION TABLE OF 3-PHASE SQUIRREL CAGE INDUCTION MOTOR	CUSTOMER		USER	
	INQ. NO.		EQUIPMENT	
	JOB NO.		MACHINE	
	TOTAL SETS		ITEM NO.	

Item	Terms	Description			
1	Model	AESV4S			
2	Code or Standard	Dimensions	Frame Assignment	Performance	Test
		IEC	IEC	IEC	IEC
3	Rating	1.5KW/ 2 HP 6 Pole 400-415|440-460 Volt 3 Phase 50|60 Hz			
4	Service Duty	ontinuous Rating , Service Factor 1.0			
5	Starting Method	Full voltage direct on line			
6	Rotation	Facing The Drive End : CW(ClockWise), Available for Bi-Direction			
7	Drive Method	Direct Coupling			
8	Environment	Amb. Temp. : - 15 ~ 40 ℃			
		Humidity : Less Than 90 %RH			
		Altitude : Up to 1000 M			
9	Enclosure & Protection	IP66 : Totally Enclosed			Indoor
10	Cooling	IC411 : Self External Fan, Surface Cooling			
11	Mounting	IM1001 : HS, Foot,			
12	Dimensions	Dr# TTAKG25087-091		Frame No：100L	
13	Frame & Bracket	Frame : Cast iro		Bracket : Cast iron	
14	Fan & Fan Cover	Fan :Plastic		Fan Cover :Steel plate	
15	Terminal Box	Cast iron			
16	Lead Terminals	T01X6			
17	Lubricant				
18	Painting	Color : MUNSELL 3.5 GY 6.9/0.4			
19	Stator Winding	Ins. Class H Connection:2△/2Y			
20	Rotor Conductor	Al-Die Cas		GD^2：0.0117 Kg-m^2	
21	Starting & Operating Performance	LRC Amp		LRT/FLT 100 %	
		Hz/V	50/400	50/415	60/440	60/460
		%Load	100			
		Amp.	3.6	3.47	3.2	3.1
		Eff.%	85.9	85.9	85.9	85.9
		P.F.%	0.70	0.70	0.71	0.71
		R.P.M.	960	960	1165	1165
		LRC/FL	6.5	6.5	6.5	6.5
	*LRC=Lock Rotor Current	LRT/FL	2.3	2.3	2.1	2.1
	*LRT/FLT=Lock Rotor Torque/Full Load Torque	BDT/FL	3.0	3.0	2.1	2.1
	*FLT=Full Load Torque	Temp. Rise Limit. (Resistance) Stator 80 ℃ AT SF1.0				
22	Approximate Weight				
23	Note	1.Tolerances according to IEC60034-1. 2.With tropical proof.			

FOR APPROVAL

Please confirm or comment, and return within 7 business days. Otherwise, these drawings will be deemed as certified and approved.

Approved by :
Order No. P3257023T1

APPD.			**TECO ELEC. & MACH. CO., LTD.**	DWG NO. **32057A001-00029**
CHKD.				
DWN.				REV.00 1/1

TECO	OUTLINE DIMENSIONS 3—PHASE INDUCTION MOTOR	MOTOR TYPE: AESV4S
DATE		FRAME NO. 100

Pole	HP	kW	Hz	VOLT	r/min
6	2	1.5	50/60	400-415V/440-460V	1000/1200

Ins	Rating	Dimension in	Approx Weight	Bearings
H	CONT.	mm		DE: 6206-ZZC3 NDE: 6206-ZZC3

Totally Enclosed Fan Cooled Type, Squirrel Cage Rotor.

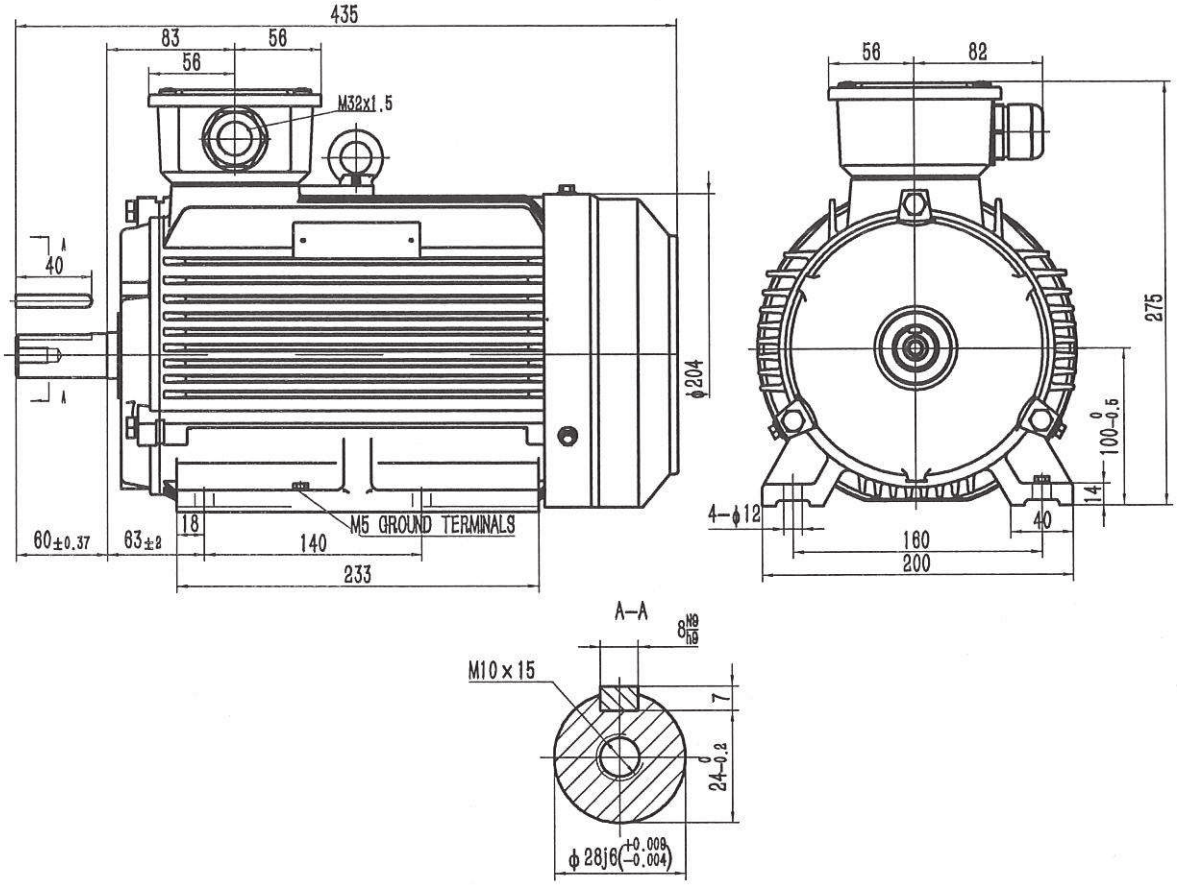

FOR APPROVAL

Please confirm or comment, and return within 7 business days. Otherwise, these drawings will be deemed as certified and approved.

Approved by :
Order No. P3257023T1

DWN.		· ·	東元電機股份有限公司 TECO Electric & Machinery Co., Ltd. WUXI
CHKD.		· ·	
APPD.		· ·	

DWG NO. TTAKG25087-091