SPECIFICATION TABLE OF 3-PHASE SQUIRREL CAGE INDUCTION MOTOR	CUSTOMER		USER	
	INQ. NO.		EQUIPMENT	
	JOB NO.		MACHINE	
	TOTAL SETS		ITEM NO.	

Item	Terms	Description				
1	Model	AESV4S				
2	Code or Standard	Dimensions	Frame Assignment	Performance	Test	
		IEC	IEC	IEC	IEC	
3	Rating	11kW/15HP 6 Pole 400-415|440-460 Volt 3 Phase 50|60 Hz				
4	Service Duty	Continuous Rating , Service Factor 1.0				
5	Starting Method	Full voltage direct on line				
6	Rotation	Facing The Drive End : CW(ClockWise), Available for Bi-Direction				
7	Drive Method	Direct Coupling				
8	Environment	Amb. Temp. : -15 ~ 40 ℃				
		Humidity : Less Than 90 %RH				
		Altitude : Up to 1000 M				
9	Enclosure & Protection	IP66 : Totally Enclosed				Indoor
10	Cooling	IC411 : Self External Fan, Surface Cooling				
11	Mounting	IM1001 : HS, Foot				
12	Dimensions	Dr# 32049A26021		Frame No ： 160L		
13	Frame & Bracket	Frame : Cast iron		Bracket : Cast iron		
14	Fan & Fan Cover	Fan :Plastic		Fan Cover :Steel plate		
15	Terminal Box	Cast iron				
16	Lead Terminals	(R3.5-6)X6				
17	Lubricant	--				
18	Painting	Color : MUNSELL 3.5GY 6.9/0.4				
19	Stator Winding	Ins. Class H Connection:△/Y				
20	Rotor Conductor	Al-Die Cast			GD^2 ： 0.672 Kg-m^2	
21	Starting & Operating Performance	Hz/V	50/400	50/415	60/440	60/460
		%Load	100			
		Amp.	22.1	21.3	20.3	19.4
		Eff.%	92.3	92.3	93.0	93.0
		P.F.%	78.0	78.0	76.5	76.5
		R.P.M.	970	970	1175	1175
	*LRC/FLC=Lock Rotor Current/Full Load Current	LRC/FLC	800 %	800 %	975 %	975 %
	*LRT/FLT=Lock Rotor Torque/Full Load Torque	LRT/FLT%	275	275	185	185
	*BDT/FLT=Break Down Torque/Full Load Torque	BDT/FLT%	290	290	280	280
		Temp. Rise Limit. (Resistance) Stator 80 ℃ AT SF1.0				
22	Approximate Weight					
23	Note	1.Tolerances according to IEC60034-1. 2.With thermistor PTC 150℃X3 PCS/SET. 3.With tropical proof.				

FOR APPROVAL

Please confirm or comment, and return within 7 business days. Otherwise, these drawings will be deemed as certified and approved.

Approved by :
Order No. P6257083T1

APPD.	S.XU	JUN. 25 2025	**TECO ELEC. & MACH. CO., LTD.**	DWG NO. **32057R001-45492**
CHKD.	Lan Yi	JUN. 11 2025		
DWN.	JunYang Wu	JUN. 05 2025		REV.00 1/1

TECO	OUTLINE DIMENSIONS	MOTOR TYPE: AESV4S—YBY
DATE	3—PHASE INDUCTION MOTOR	FRAME NO. 160L

Pole	HP	kW	Hz	VOLT	r/min
6	15	11	50	380—415/(660—720)	1000

Ins	Rating	Dimension in	Approx Weight	Bearings
H	CONT.	mm		DE: 6309ZZC3 NDE: 6307ZZC3

Totally Enclosed Fan—Cooled Type. Squirrel—Cage Rotor.

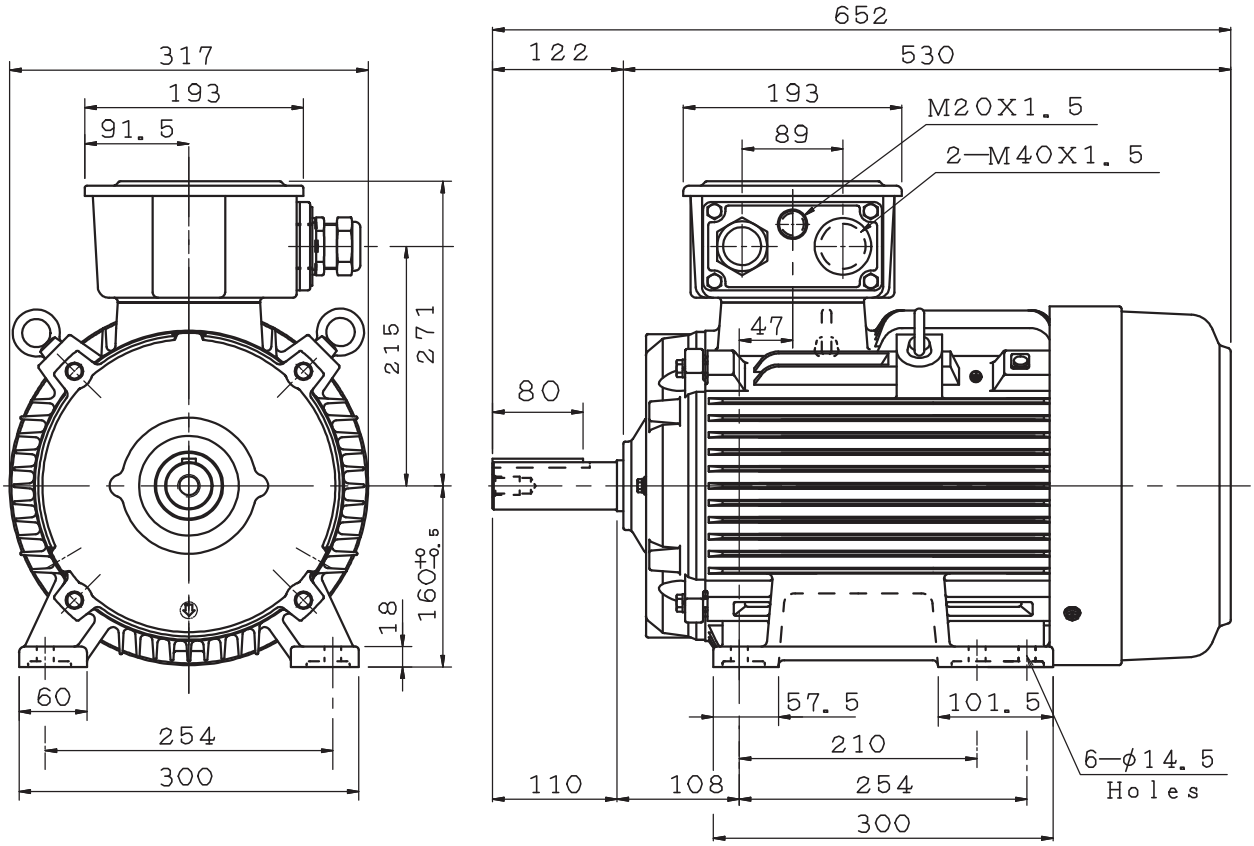

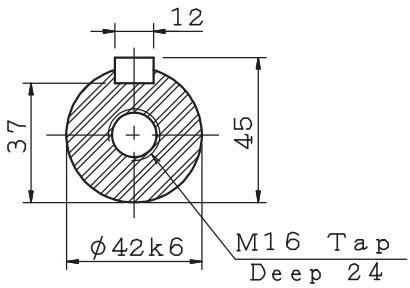

Note:
1. IP66
2. H CLASS, B RISE.

FOR APPROVAL

Please confirm or comment, and return within 7 business days. Otherwise, these drawings will be deemed as certified and approved.

Approved by :
Order No. P6257083T1

TTAKG25087—57

DWN.	易藍	06•09•25	東元電機股份有限公司 TECO Electric & Machinery Co., Ltd. WUXI	DWG NO. 32049A260210
CHKD.	王貴	06•25•25		
APPD.	郭耿良	06•25•25		