| SPECIFICATION TABLE OF 3-PHASE SQUIRREL CAGE INDUCTION MOTOR | CUSTOMER | | USER | |
|---|---|---|---|---|
| | INQ. NO. | | EQUIPMENT | |
| | JOB NO. | | MACHINE | |
| | TOTAL SETS | | ITEM NO. | |

| Item | Terms | Description | | | | |
|---|---|---|---|---|---|---|
| 1 | Model | AESV4S | | | | |
| 2 | Code or Standard | Dimensions | Frame Assignment | Performance | Test | |
| | | IEC | IEC | IEC | IEC | |
| 3 | Rating | 7.5kW/10HP 6 Pole 400-415\|440-460 Volt 3 Phase 50\|60 Hz | | | | |
| 4 | Service Duty | Continuous Rating , Service Factor 1.0 | | | | |
| 5 | Starting Method | Full voltage direct on line | | | | |
| 6 | Rotation | Facing The Drive End : CW(ClockWise), Available for Bi-Direction | | | | |
| 7 | Drive Method | Direct Coupling | | | | |
| 8 | Environment | Amb. Temp. : -15 ~ 40 ℃ | | | | |
| | | Humidity : Less Than 90 %RH | | | | |
| | | Altitude : Up to 1000 M | | | | |
| 9 | Enclosure & Protection | IP66 : Totally Enclosed | | | | Indoor |
| 10 | Cooling | IC411 : Self External Fan, Surface Cooling | | | | |
| 11 | Mounting | IM1001 : HS, Foot | | | | |
| 12 | Dimensions | Dr# 32049A20011 | | Frame No ： 160M | | |
| 13 | Frame & Bracket | Frame : Cast iron | | Bracket : Cast iron | | |
| 14 | Fan & Fan Cover | Fan :Plastic | | Fan Cover :Steel plate | | |
| 15 | Terminal Box | Cast iron | | | | |
| 16 | Lead Terminals | (R2-6)X6 | | | | |
| 17 | Lubricant | -- | | | | |
| 18 | Painting | Color : MUNSELL 3.5GY 6.9/0.4 | | | | |
| 19 | Stator Winding | Ins. Class H Connection:△/Y | | | | |
| 20 | Rotor Conductor | Al-Die Cast | | | GD^2 ： 0.503 Kg-m^2 | |
| 21 | Starting & Operating Performance | Hz/V | 50/400 | 50/415 | 60/440 | 60/460 |
| | | %Load | 100 | | | |
| | | Amp. | 15.4 | 14.8 | 14.1 | 13.5 |
| | | Eff.% | 91.3 | 91.3 | 92.4 | 92.4 |
| | | P.F.% | 77.0 | 77.0 | 75.5 | 75.5 |
| | | R.P.M. | 975 | 975 | 1180 | 1180 |
| | *LRC/FLC=Lock Rotor Current/Full Load Current | LRC/FLC | 780 % | 780 % | 925 % | 925 % |
| | *LRT/FLT=Lock Rotor Torque/Full Load Torque | LRT/FLT% | 275 | 275 | 185 | 185 |
| | *BDT/FLT=Break Down Torque/Full Load Torque | BDT/FLT% | 285 | 285 | 280 | 280 |
| | | Temp. Rise Limit. (Resistance) Stator 80 ℃ AT SF1.0 | | | | |
| 22 | Approximate Weight | | | | | |
| 23 | Note | 1.Tolerances according to IEC60034-1.<br>2.With thermistor PTC 150℃X3 PCS/SET.<br>3.With tropical proof. | | | | |

**FOR APPROVAL**

Please confirm or comment, and return within 7 business days. Otherwise, these drawings will be deemed as certified and approved.

Approved by :
Order No. P6257070T1

| APPD. | S.XU | JUN. 25 2025 | TECO ELEC. & MACH. CO., LTD. | DWG NO. 32057R001-45578 |
|---|---|---|---|---|
| CHKD. | Lan Yi | JUN. 11 2025 | | |
| DWN. | YJY | JUN. 09 2025 | | REV.00 1/1 |

| TECO | OUTLINE DIMENSIONS<br>3—PHASE INDUCTION MOTOR | MOTOR TYPE:<br>AESV4S—YBY |
|---|---|---|
| DATE | | FRAME NO. 160M |

| Pole | HP | kW | Hz | VOLT | r/min |
|---|---|---|---|---|---|
| 6 | 10 | 7.5 | 50 | 380—415/(660—720) | 1000 |

| Ins | Rating | Dimension in | Approx Weight | Bearings |
|---|---|---|---|---|
| H | CONT. | mm | | DE: 6309ZZC3NDE:6307ZZC3 |

Totally Enclosed Fan—Cooled Type. Squirrel—Cage Rotor.

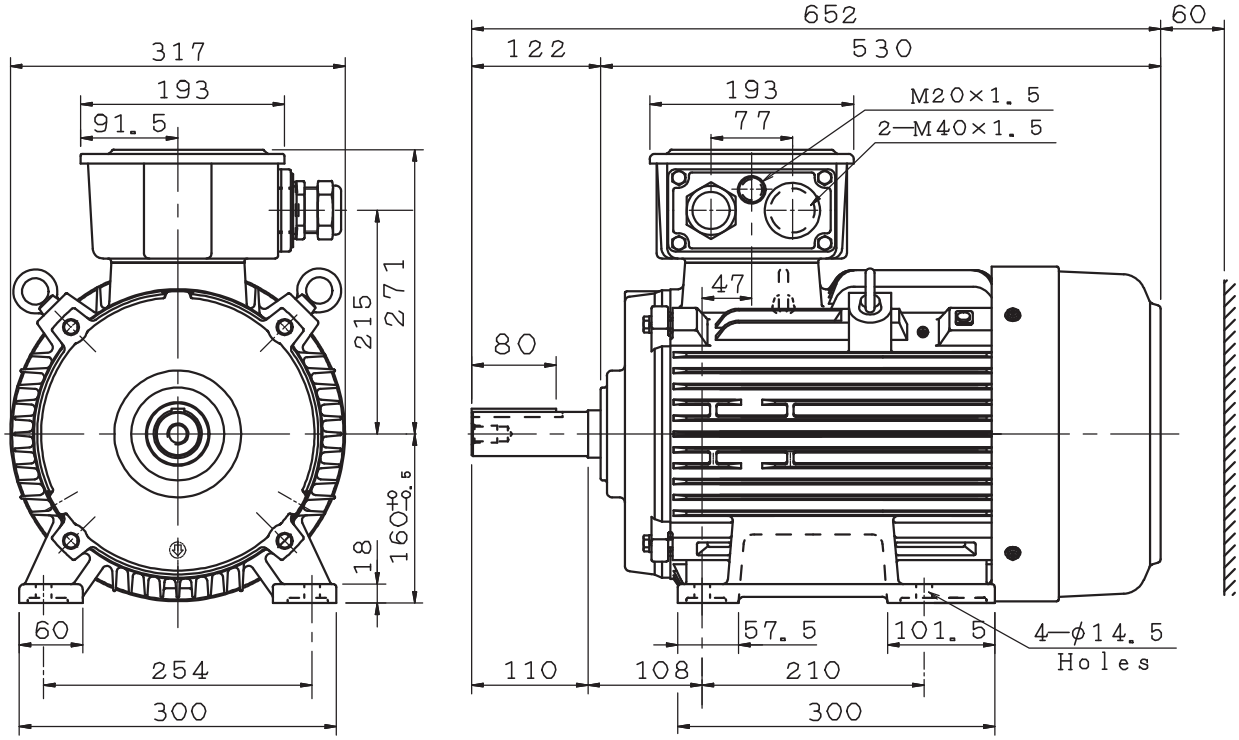


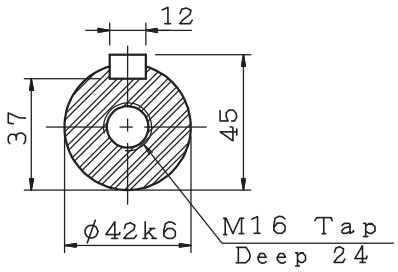


Note:
1. IP66
2. H CLASS, B RISE.

**FOR APPROVAL**

Please confirm or comment, and return within 7 business days. Otherwise, these drawings will be deemed as certified and approved.

Approved by :
Order No. P6257070T1

TTAKG25087—10

| | | | | |
|---|---|---|---|---|
| DWN. | 易藍 | 06•06•25 | 東元電機股份有限公司<br>TECO Electric & Machinery Co., Ltd.<br>WUXI | DWG NO. |
| CHKD. | 王貴 | 06•25•25 | | 32049A200110 |
| APPD. | 郭耿良 | 06•25•25 | | |